CDK455

DRIVER

Description

The CDK455 is a compression driver for professional applications where high-quality sound and long-term reliability are required. The ultra-compact size, 1.75″ Kapton® dome, and the low recommended crossover point make this transducer ideal for point source two-way cabinet designs. The new 1.75″ compression driver voice-coil design with Polyimide-Kapton dome features a new bonding technology and reinforced ribs make it robust and durable. The transducer utilizes ceramic magnets and a 2-slot phase plug to deliver exceptional power handling, sensitivity, and low distortion across its operating bandwidth. The driver specifies 140 Watts of continuous power handling, with a sensitivity of 109 dB.

Features

- 1.75-inch Kapton/polyimide dome
- Kapton former, edge wound aluminum voice coil
- 140W continuous program power handling @ 8O
- Frequency range: 1200Hz - 20kHz
- 2-slot optimized geometry phase plug
- Ceramic magnet
- Recommended for 2-way speaker design

Part Number

15100031 CDK455 8ohm

CDK455

DRIVER

TECHNICAL SPECIFICATIONS

General specifications	Exit Throat Diameter	1.0 inch / 25 mm
	Related Impedance	8 ohm
	Program Power (watt)	140 W
	Power handling capacity (watt)	70 W
	Sensitivity	109 dB
	Frequency range	1200 - 20000 Hz
	Diaphragm Material	Polyimide
	Suspension Material	Polyimide
	Suspension Design	Flat
	Minimum Impedance (ohm)	6.50 ohm
	Voice Coil Diameter	1.75 inch / 44 mm
	Voice Coil Material	Edgewound Aluminum
	Voice Coil Former Design	Straight - Kapton
	Number of layers	1
	Kind of layers	outside
	Flux Density	1.5 T
	Phase Plug Design	2 slot
	Phase Plug Material	PP Composite
	Magnetics	Ceramic
Thiele - small parameters	Bl factor (Bl) (T x m)	5.85 T x m
Mounting information	Overall diameter	102 mm / 4.02 inches
	Overall height	47 mm / 1.85 inches
	Mounting	4 x 6 mm threaded holes at 90°
Standard compliance	Safety agency	CE compliant
Size	Weight	1.23 kg / 2.71 lbs
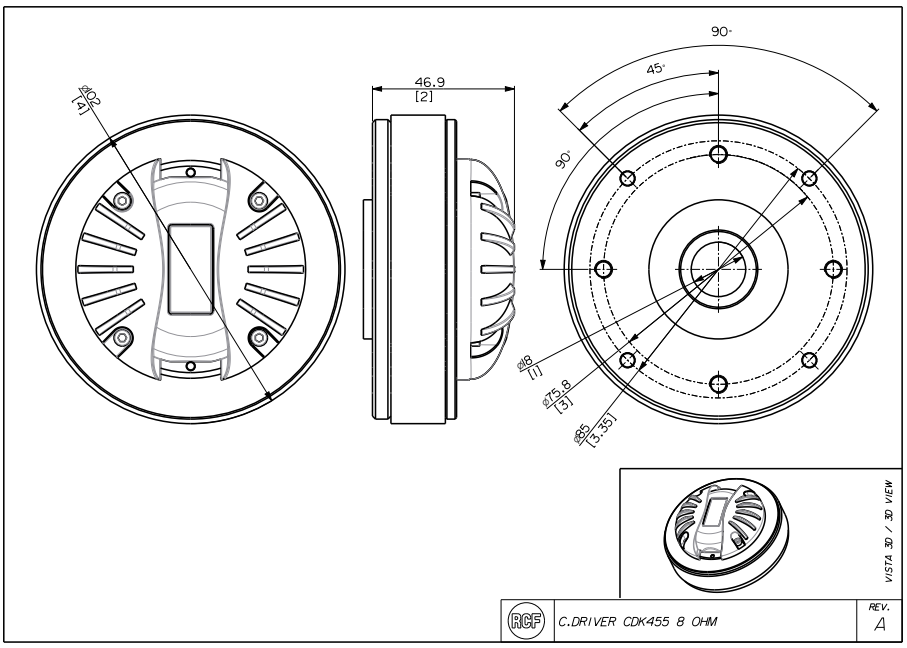
Line Art 2D