NDX495

DRIVER

Description

The 1.75" PKX dome NDX495 is a compression driver for professional applications where high-quality sound and long-term reliability are required. The ultra-compact size and the low recommended crossover point from 1000 Hz make this transducer ideal for two-way cabinet designs and three-way loudspeaker systems. PKX (modified polyether ether ketone) is a rigid yet lightweight material, optimized with reinforcing ribs, offering remarkable precision and reliability compared with other polymeric materials. The voice coil utilizes ultralight edge wound aluminum wire, class-leading neodymium magnets, a 4-slot phase plug, and a copper ring design to deliver exceptional power handling, sensitivity, and low distortion across its operating bandwidth. The driver specifies 140 Watts of continuous power handling, with a sensitivity of of 109 dB.

Features

› 1.75-inch PKX dome, polyimide surround
› Kapton former, edge wound aluminum voice coil
› 140W continuous program power handling @ 8O
› Frequency range: 500Hz - 20kHz
› 4-slot optimized geometry phase plug
› Copper inductance ring for extended response
› High-flux density neodymium magnet
› Recommended for 2-way speaker design

Part Number

15100024	NDX495	8ohm
25118049	NDX 495	

NDX495

DRIVER

TECHNICAL SPECIFICATIONS

General specifications	Exit Throat Diameter	1.0 inch / 25 mm
	Related Impedance	8 ohm
	Program Power (watt)	140 W
	Power handling capacity (watt)	70 W
	Sensitivity	109 dB
	Frequency range	1200 - 20000 Hz
	Diaphragm Material	PKX Polymer
	Suspension Material	PKX Polymer
	Suspension Design	Flat
	Minimum Impedance (ohm)	6.50 ohm
	Voice Coil Diameter	1.75 inch / 44 mm
	Voice Coil Material	Edgewound Aluminum
	Voice Coil Former Design	Straight - Kapton
	Number of layers	1
	Kind of layers	outside
	Flux Density	1.8 T
	Phase Plug Design	3 slot
	Phase Plug Material	PP Composite
	Magnetics	Neodymium
Thiele - small parameters	Bl factor (Bl) (T x m)	7.50 T x m
Mounting information	Overall diameter	85 mm / 3.35 inches
	Overall height	44 mm / 1.73 inches
	Mounting	4 x 6 mm threaded holes at 90°
Standard compliance	Safety agency	CE compliant
Size	Weight	0.85 kg / 1.87 lbs
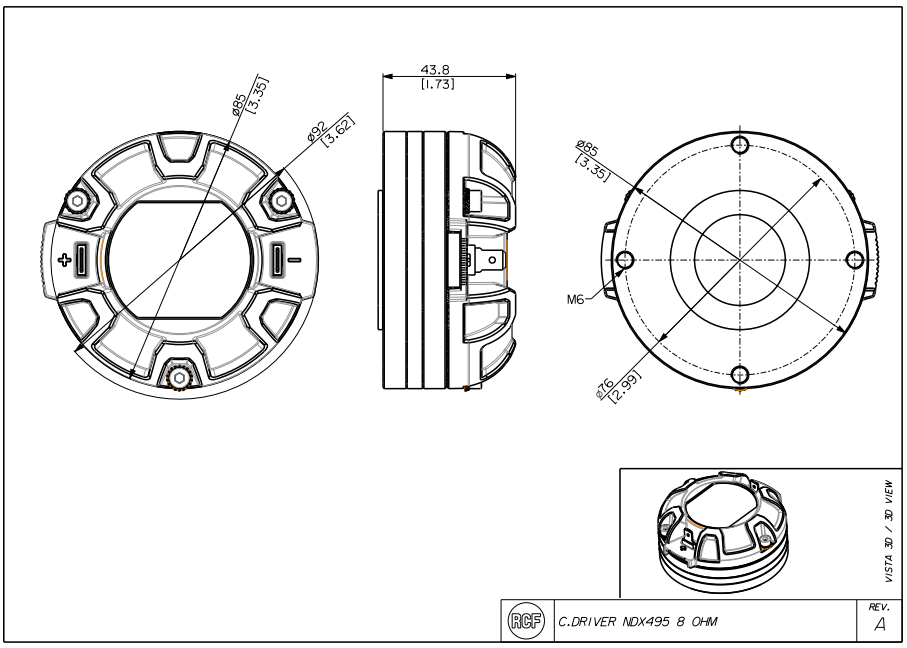
Line Art 2D