NDX595

DRIVER

Description

The 1.75" PKX dome NDX595 is a compression driver for professional applications where high-quality sound and long-term reliability are required. The ultra-compact size and the low recommended crossover point at 1000 Hz make it ideal for small two-way cabinet designs and three-way loudspeaker systems. PKX (modified polyether ether ketone) is a rigid yet lightweight material, optimized with reinforcing ribs, offering remarkable precision and reliability compared with other polymeric materials. The voice coil utilizes ultralight edge wound aluminum wire, class-leading neodymium magnets, a 3-slot phase plug, and a copper ring design to deliver exceptional power handling, sensitivity, and low distortion across its operating bandwidth. The driver specifies 140 Watts of continuous power handling at 8 ohms, with a sensitivity of 110 dB.

Features

- 1.75-inch PKX dome, polyimide surround
- Kapton former, edge wound aluminum voice coil
- 140W continuous program power handling @ 8O
- Frequency range: 500Hz - 20kHz
- 4-slot optimized geometry phase plug
- Copper inductance ring for extended response
- High-flux density neodymium magnet
- Recommended for 3-way speaker design

Part Number

15100023 NDX595 8ohm

NDX595

DRIVER

TECHNICAL SPECIFICATIONS

General specifications	Exit Throat Diameter	1.0 inch / 25 mm
	Related Impedance	8 ohm
	Program Power (watt)	140 W
	Power handling capacity (watt)	70 W
	Sensitivity	110 dB
	Frequency range	1200 - 20000 Hz
	Diaphragm Material	PKX Polymer
	Suspension Material	PKX Polymer
	Suspension Design	Flat
	Minimum Impedance (ohm)	6.50 ohm
	Voice Coil Diameter	1.75 inch / 44 mm
	Voice Coil Material	Edgewound Aluminum
	Voice Coil Former Design	Straight - Kapton
	Number of layers	1
	Kind of layers	outside
	Flux Density	2.1 T
	Phase Plug Design	3 slot
	Phase Plug Material	PP Composite
	Magnetics	Neodymium
Thiele - small parameters	Bl factor (Bl) (T x m)	8.00 T x m
Mounting information	Overall diameter	90 mm / 3.54 inches
	Overall height	47 mm / 1.85 inches
	Mounting	4 x 6 mm threaded holes at 90°
Standard compliance	Safety agency	CE compliant
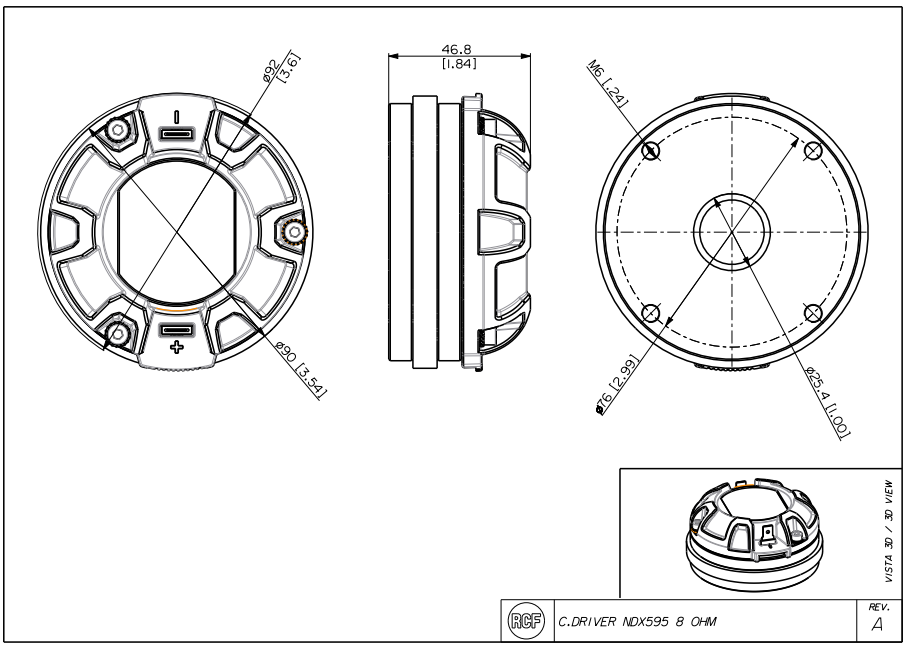
Line Art 2D