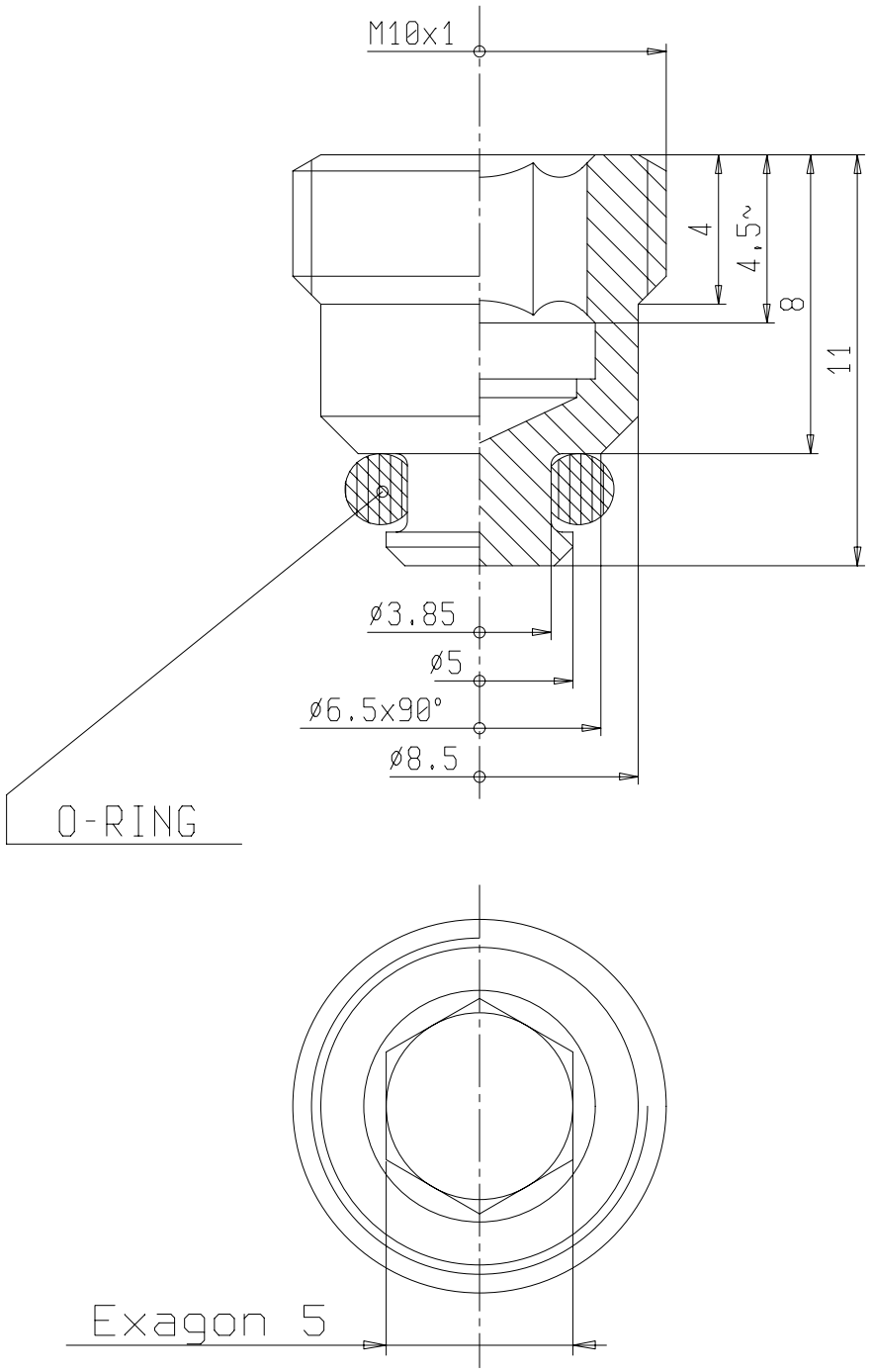

DIMENSIONS BETWIEEN [...] ARE IN INCHES
DIMENSIONS WITHOUT TOLERANCE ARE INDICATIVE

MODIFICATION				
Rev.	Mod.N°	Date	Description	Name

Drawn	23.03.07	Rosso	Description TAPPO M10x1 OTTONE	Release Level
	Date	Name	Technical Information	
			Material	Scale 5:1 ISO
			Material Condition	
			Heat Treatment	Replaces Dwg N°
			Surface Treatment	I.M. Frm. A4
			Sealing Surface · · · · · · · · Surface Hardness	
				Sit Drawing N° 0972041 Rev.

This drawing may not be copied or disclosed to third person without permission of SIT. We are the owner of this drawing.

SIT La Precisa S.p.A.
35129 Padova (Italy) Viale dell'Industria 31/33

NOME FILE (.DRW)