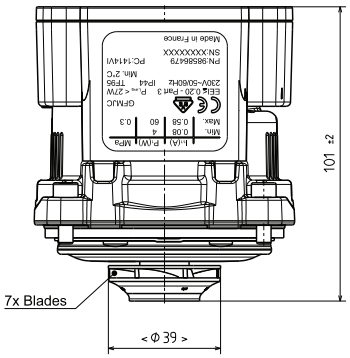

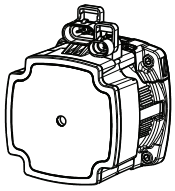

Isometric view
Scale: 1:2

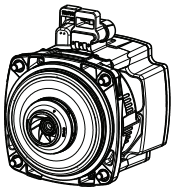

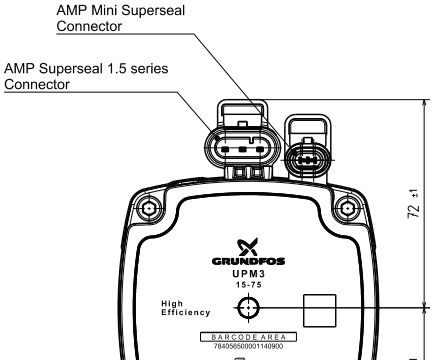

Barcode: Interleaved 2/5, Black bars

7840565XXXXXXXXXXX

- : Control no.(default 0)
- : Code no.(default 0)
- : Prod. week
- : Prod. year
- : Serial no.
- : Article no.

Colour	:	Pump head unpainted		
Stamping	:	Production code:		PC:1414VI
		14	:	Year code
		14	:	Week code
		VI	:	Viessmann
	:	Country code (FR)		
		FR	:	France
SN	:	Serial number - 8 digits - 10000000-99999999		
Accessories	:	Instructions, Grundfos no. 98603098		
		Screw bag, Grundfos no. 98400958		
		Global safety indication, Grundfos no. 9837944		
		Doc. , Grundfos no. 98567834		
Packaging	:	Single box		

Viessmann
FZC 7840565 Teil 000 Vers. 02
Änderungs-Nr.: 154914

ECM No.	Date -Init	
1133021	2014-04-01 LSS	Drawing type: Assembly Drawing
1131029	2014-03-04 CML	Related drawings:
1130002	2014-02-26 CML	Projection:

Basic Material No:
Dimension of basic material:
Type of basic material:

GRUNDFOS
DK-8850 BJERRINGBRO DENMARK

As this is the property of GRUNDFOS a/s it must not be passed on to any person not authorized by GRUNDFOS or be copied or otherwise utilized by anybody without GRUNDFOS' expressed written permission.

Description:
Spare pump head
UPM3 15-75
VI 7840565

Scale:	Drawer:	Date:
1:1	955	2013-11-21
	Approver: 2491	Date: 2014-04-01

Replaced:
Replaced by:
Drawing No: 98586479
Page: 1 of: 1
Part Version: --B Doc. Revision: --B

Viewed from SAP 20140424 100659 by GWSPAU Status: Released Version: 02 EFI Date: 20140401