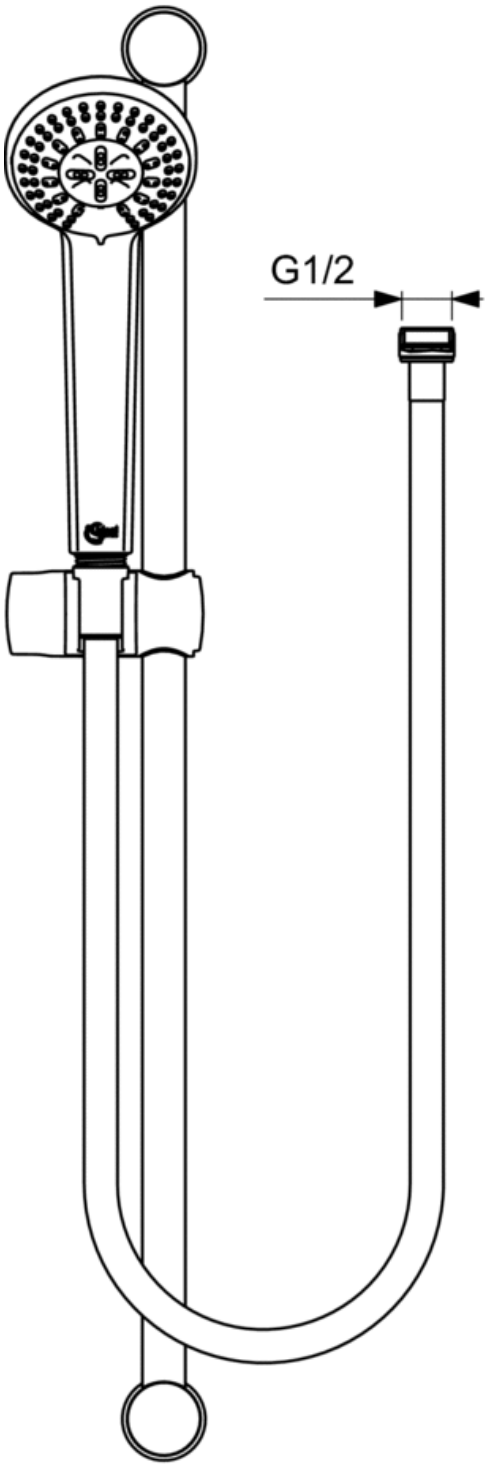
G1/2

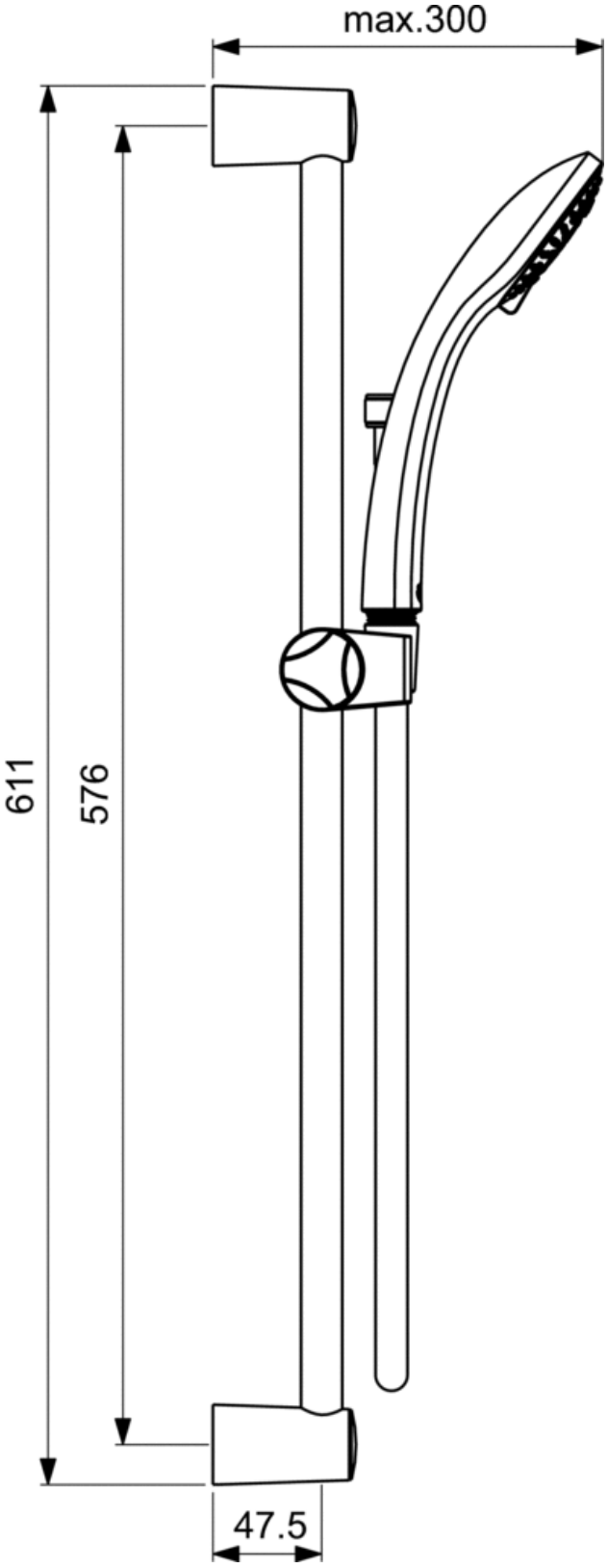
max.300
611
576
47.5