Technische Daten/ Technical Data

KLUDI AMBA
single lever bath-and shower mixer
floor standing for free standing bath tubs
DN 15

Ref.:
535900575

Finishes:
05 chrome

Product description
Manufacturer KLUDI GmbH & Co. KG
Typ: KLUDI AMBA
single lever bath-and shower mixer
floor standing for free standing bath tubs
Ref.: 525900575

bath-and shower mixer
single lever mixer
trim set without pre-installation set
pre installation set KLUDI FLEXX.BOXX Ref.: 88088
floor standing for free standing bath tubs
with shower holder
automatic diverter: shower/bath
solid lever, metal
aerator, S-Pointer M24
protected against back flow
shower outlet G½
ceramic cartridge with hot water safety device
flow rate at 3 bar 22 l/min.
fixed spout
hand shower and shower hose 1250mm

hand shower 1 S
1 spray pattern
Volumen
with cleaning system
sieve seal

shower hose
plastic coated
with conical nuts
anti twist
G½ x G½ x 1250mm

Produktabbildung/ Product picture

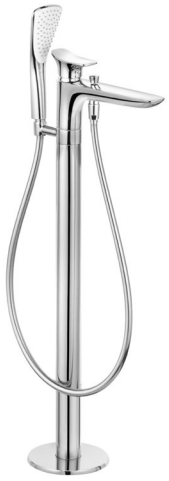

Maßzeichnung/ Dimensional drawing

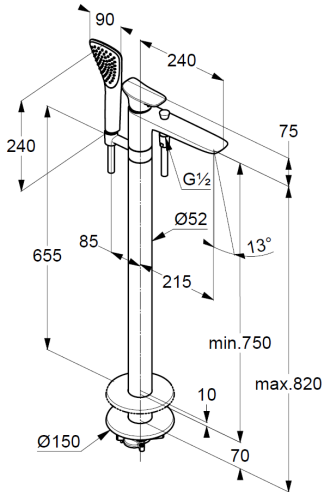

Durchfluss/ Flow rate

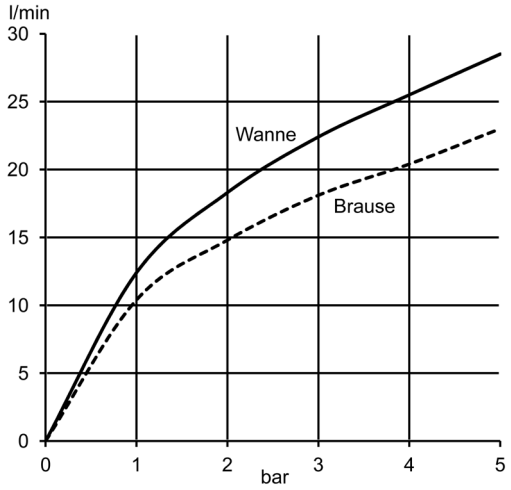

KLUDI
WATER IN PERFECTION