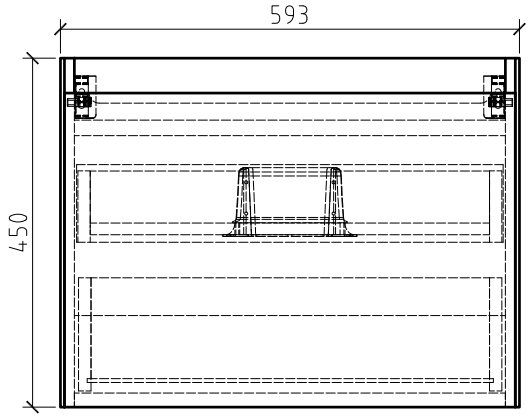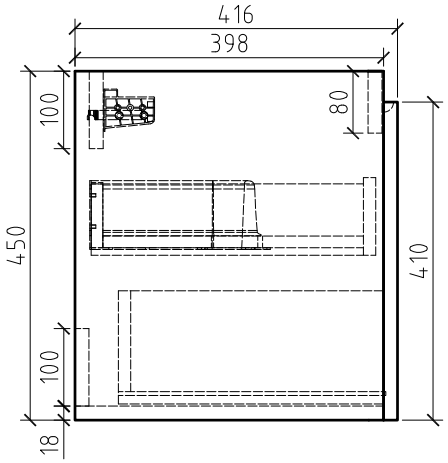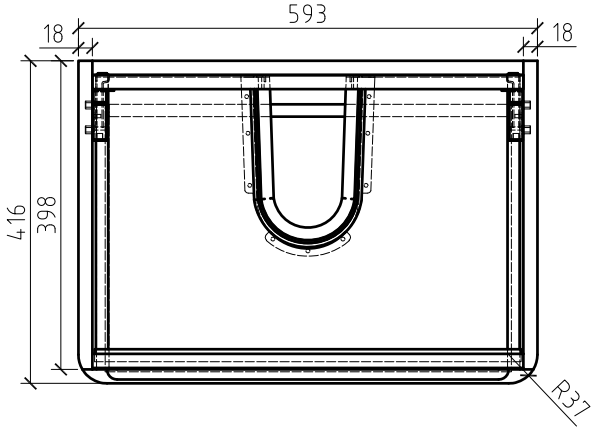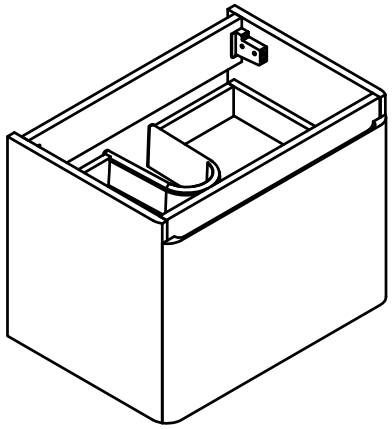TONA
Bathroom Furniture