INSTALLATION
& OWNER'S MANUAL

Wired Controller

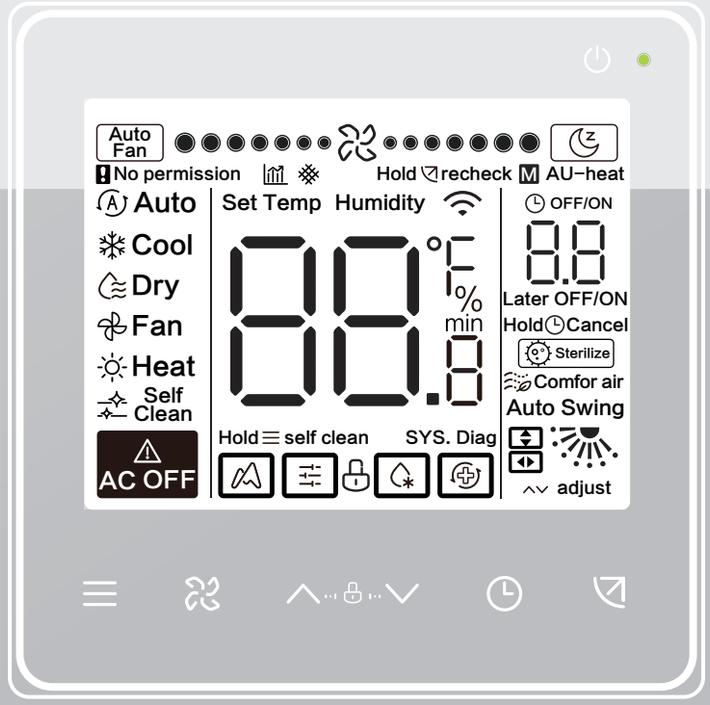

Thank you very much for purchasing our product.
Before using your unit, please read this manual carefully and keep it for future reference.

- This manual gives detailed description of the precautions that should be brought to your attention during operation.
- In order to ensure correct service of the wired controller please read this manual carefully before using the unit.
- For convenience of future reference, keep this manual after reading it.

CONTENTS

1 GENERAL SAFETY PRECAUTIONS

- 1.1 About the documentation 01
- 1.2 For the user 02

2 BASIC PARAMETERS 04

3 ACCESSORIES LIST 04

4 INSTALLATION 05

- 4.1 Installation Precautions 05
- 4.2 Installation Method 07

5 OPERATION INSTRUCTIONS

- 5.1 Control Panel Explanation ····· 15
- 5.2 Display Explanation ····· 16
- 5.3 Operation Instructions ····· 17
- 5.4 Mode Conflict Prompt ····· 31
- 5.5 Project Commissioning ····· 31

1 GENERAL SAFETY PRECAUTIONS

1.1 About the documentation

- The original documentation is written in English. All other languages are translations.
- The precautions described in this document cover very important topics, follow them carefully.
- All activities described in the installation manual must be performed by an authorized installer.

1.1.1 Meaning of warnings and symbols

⚠ CAUTION

Indicates a situation that could result in minor or moderate injury.

NOTE

Indicates a situation that could result in equipment or property damage.

i INFORMATION

Indicates useful tips or additional information.

1.2 For the user

- If you are not sure how to operate the unit, contact your installer.
- The appliance is not intended for use by persons, including children, with reduced physical, sensory or mental capabilities, or lack of experience and knowledge, unless they have been given supervision or instruction concerning use of the appliance by a person responsible for their safety. Children must be supervised to ensure that they do not play with the product.

⚠ CAUTION

Do NOT rinse the unit. This may cause electric shocks or fire.

NOTE

- Do NOT place any objects or equipment on top of the unit.
- Do NOT sit, climb or stand on the unit.

- Units are marked with the following symbol:

This means that electrical and electronic products may not be mixed with unsorted household waste. Do not try to dismantle the system yourself: the dismantling of the system, treatment of the refrigerant, of oil and of other parts must be done by an authorized installer and must comply with applicable legislation. Units must be treated at a specialized treatment facility for reuse, recycling and recovery. By ensuring this product is disposed of correctly, you will help to prevent potential negative consequences for the environment and human health. For more information, contact your installer or local authority.

2 BASIC PARAMETERS

Items	Description
Rated voltage	DC18V
Wiring size	RVVP−0.75mm^2 × 2
Operating environment	-5°C ~ 43°C
Humidity	≤ RH90%

3 ACCESSORIES LIST

No.	Name	Quantity
1	Wired controller	1
2	Philips head screw, M4×25	2
3	Installation and Operation Manual	1
4	Plastic support bar	2
5	Bottom cap of the wired controller	1
6	Round head screw ST4X20	3
7	Plastic expansion pipe	3

4 INSTALLATION

4.1 Installation Precautions

- To ensure correct installation, read the "Installation" section of this manual.
- The content provided here covers warnings, which contain important information about safety that must be followed.

⚠ CAUTION

Entrust a local distributor or local service agent to appoint a qualified technician to perform the installation. Do not try to install the unit by yourself.

Do not knock, throw, or randomly disassemble the wired controller.

The wiring must be compatible with the wired controller current.

Use the specified cables, and do not place any heavy object on the wiring terminals.

The wired controller line is a low-voltage circuit, which cannot come into direct contact with the high voltage l

ine or be laid in the same wiring tube together with the high voltage line. The minimum spacing of wiring tubes is 300 to 500 mm.

Do not install the wired controller in corrosive, flammable and explosive environments or places with oil mist (such as a kitchen).

Do not install the wired controller in a wet place and avoid direct sunlight.

Do not install the wired controller when it is powered on.

Please install the wired controller after painting the wall; otherwise, water, lime and sand may enter the wired controller.

4.2 Installation Method

4.2.1 Wiring requirements

One-to-more and two-to-more

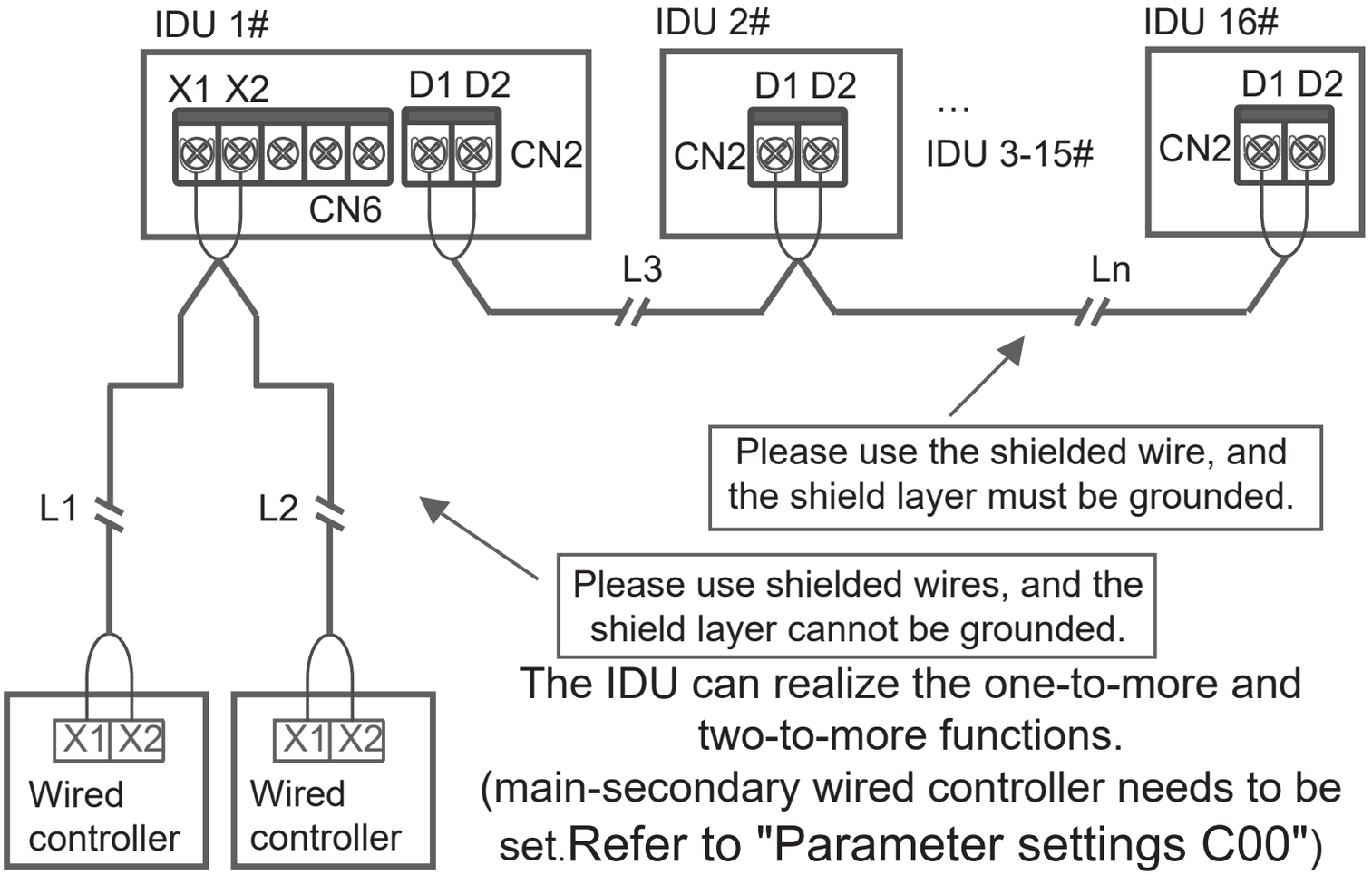

The IDU can realize the one-to-more and two-to-more functions.
(main-secondary wired controller needs to be set.Refer to "Parameter settings C00")

The one-to-more function must be set for the wired controller.(Refer to "Parameter settings N37") After the communication between the wired controller and IDU lasts 3 minutes and 30 seconds, the control can be implemented.

One-to-one

- Applicable to bi-directional communication between wired controller and IDU.
- One-to-one: One wired controller controls one IDU. The parameters displayed on the wired controller are updated in real time according to changes in the parameters of the IDU.
- The permissible longest wiring length of the system is 200 m.
- Communication cables between the IDU and the wired controller (X1, X2) may be connected in reverse order.

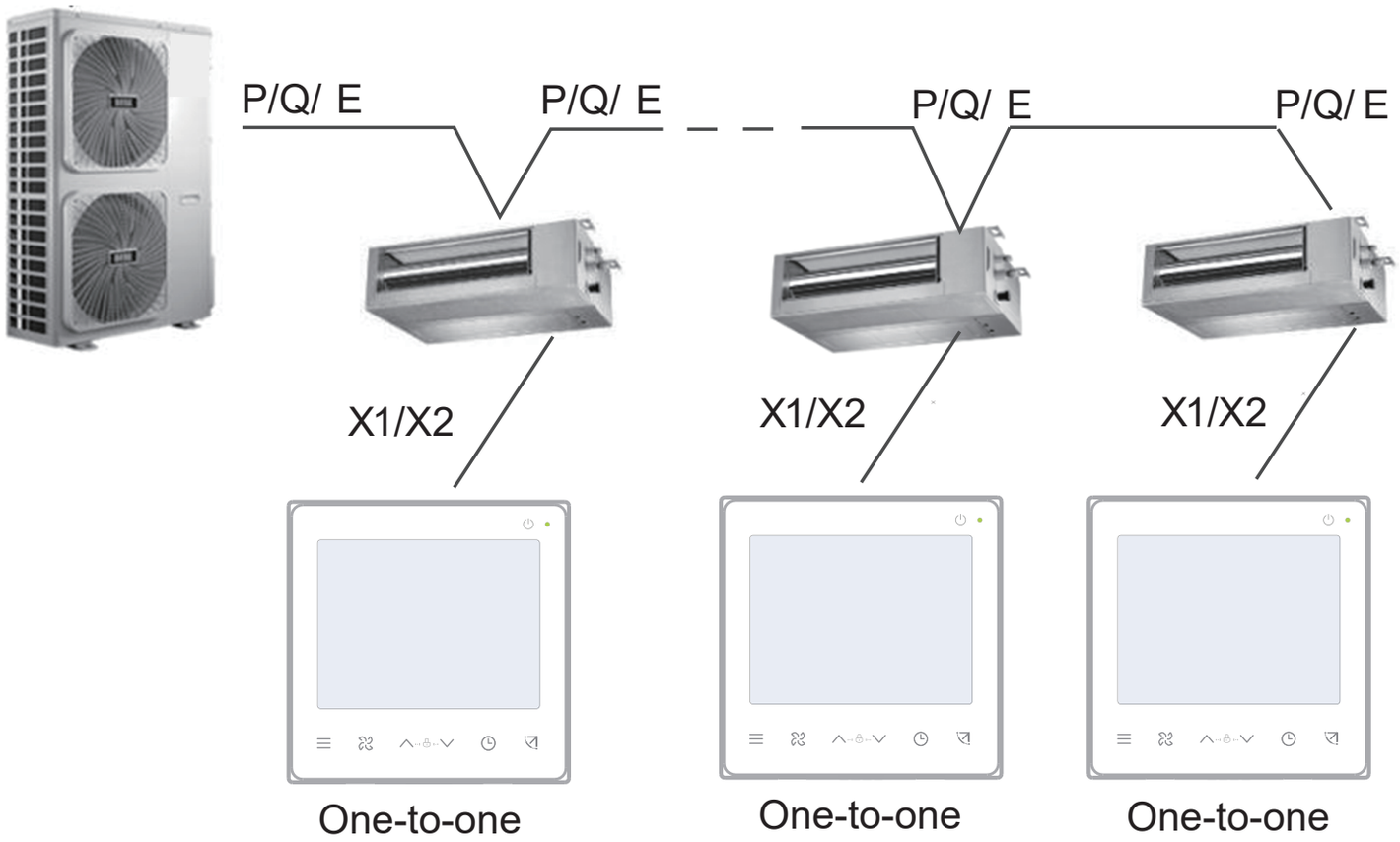

Two-to-one

- Applicable to bi-directional communication between wired controller and IDU.
- Two-to-one: Two wired controller controls one IDU. The parameters displayed on the wired controller are updated in real time according to changes in the parameters of the IDU.
- Two-to-one:wired controller must be set as main or secondary.
- Refer to "Parameter settings C00"
- The permissible longest wiring length of the system is 200 m.

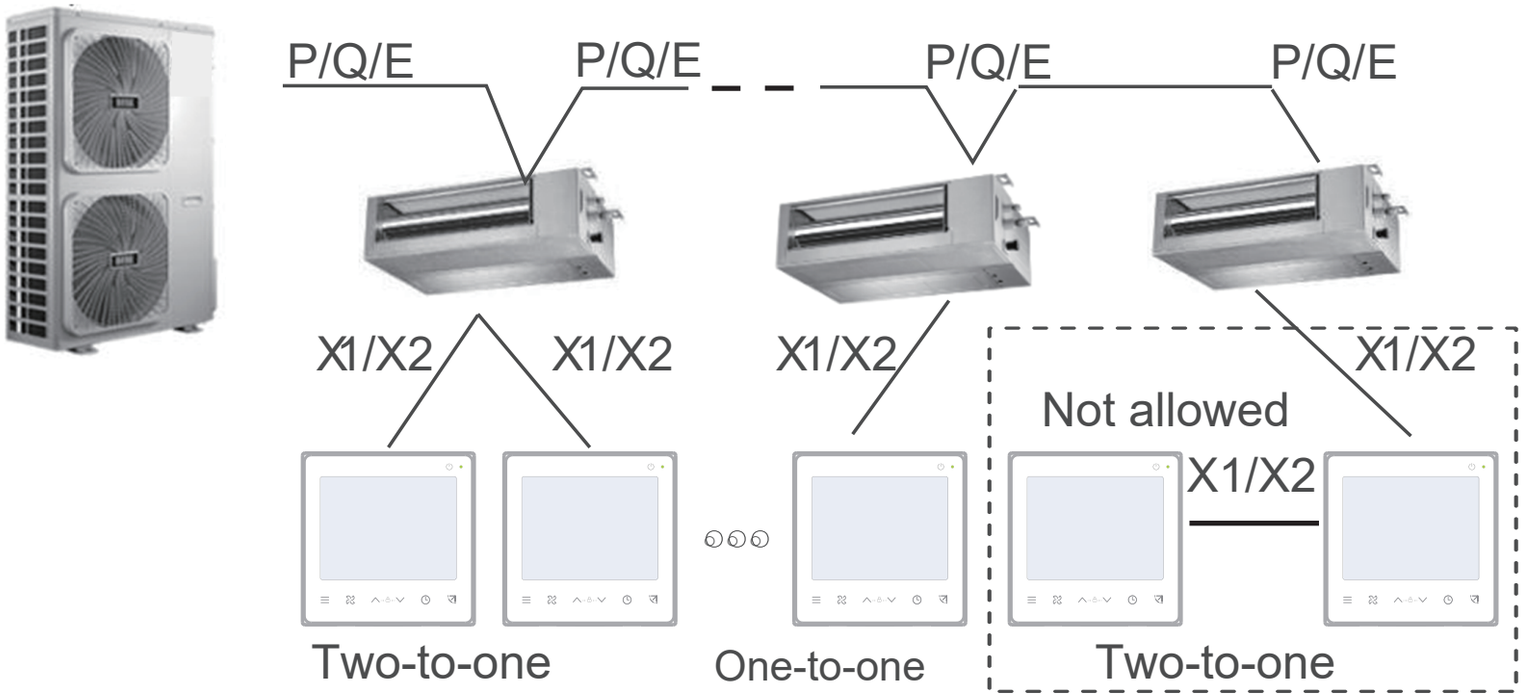

4.2.2 Installlation of bottom cap of the wired controller

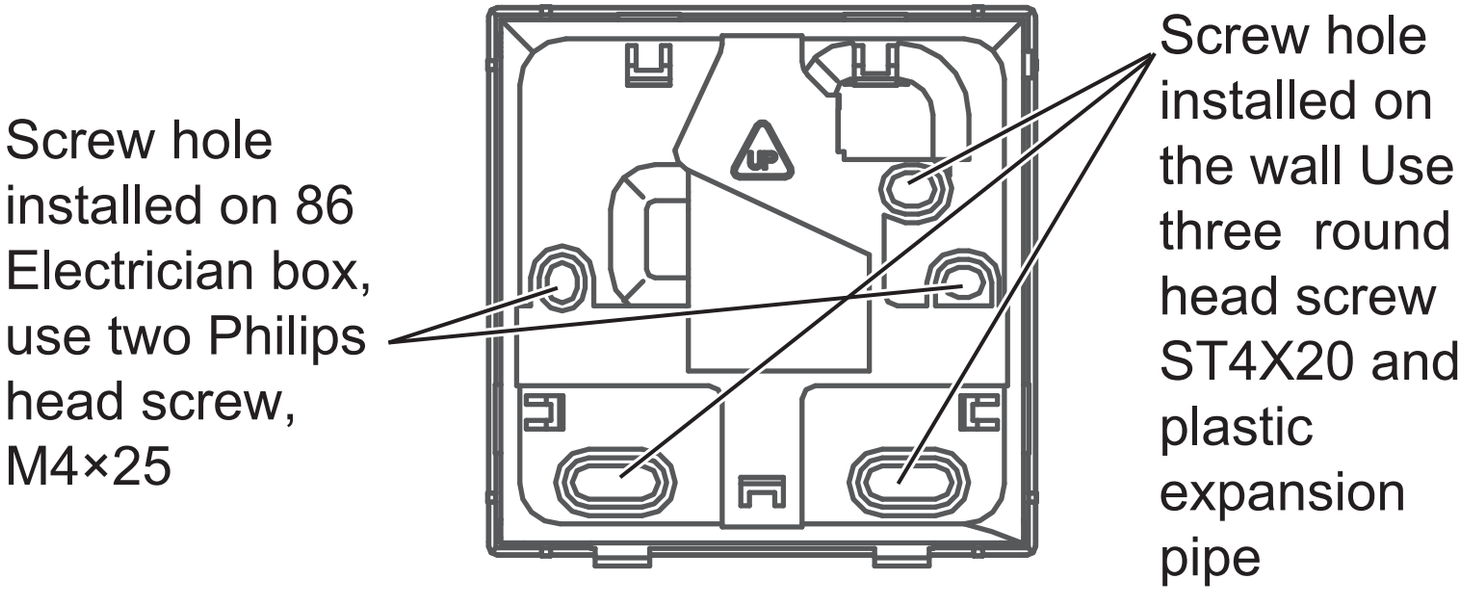

When installed on 86 Electrician box:
Adjust the lengths of the two plastic support bars in the accessory package. Ensure that the bottom cap of the wired controller stays level with the wall when installed on the screw post of electrical box.

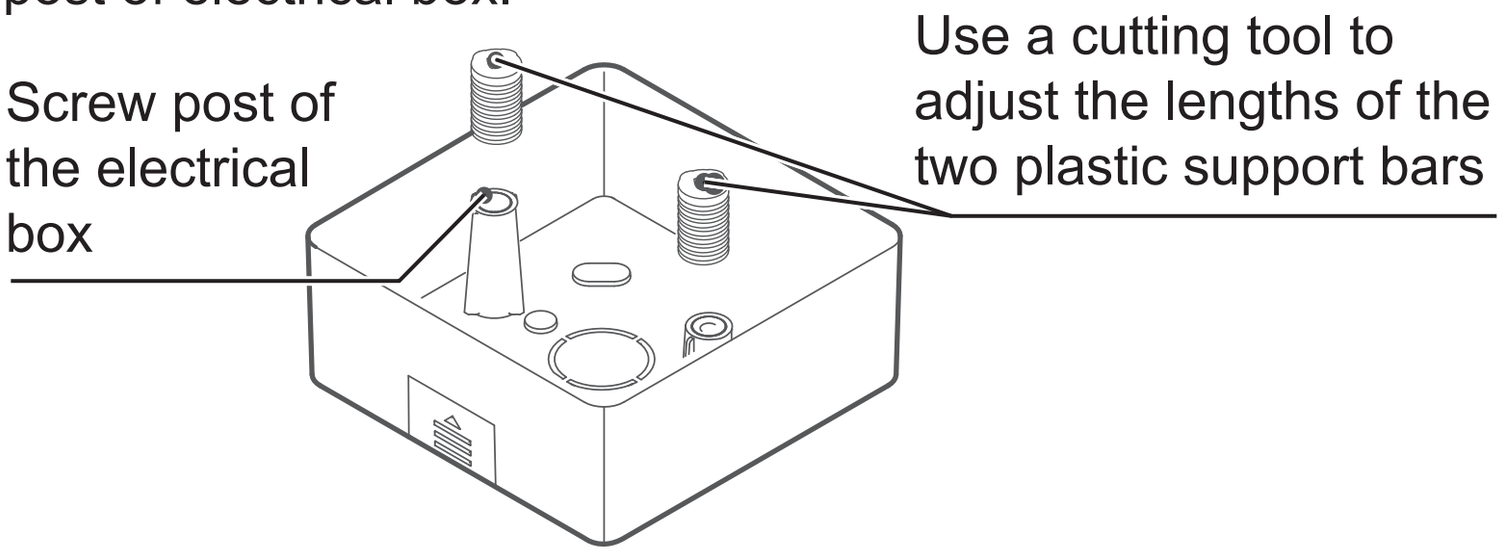

When installed on the wall:

The wire can be placed outlet or inside. Wire outlet have four side to select.

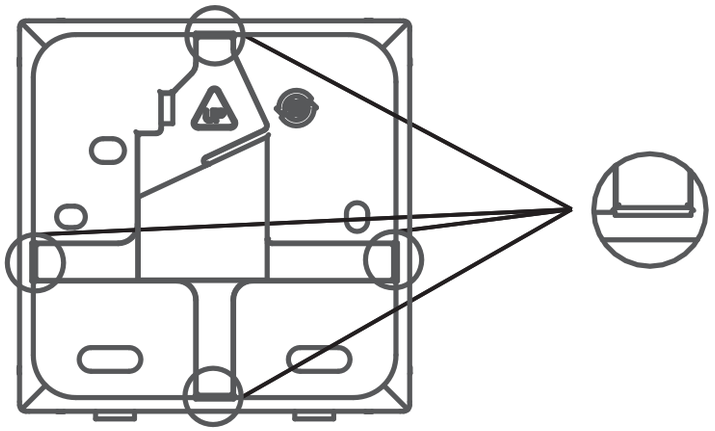

Cutting place of up,down,left and right side wire outlet

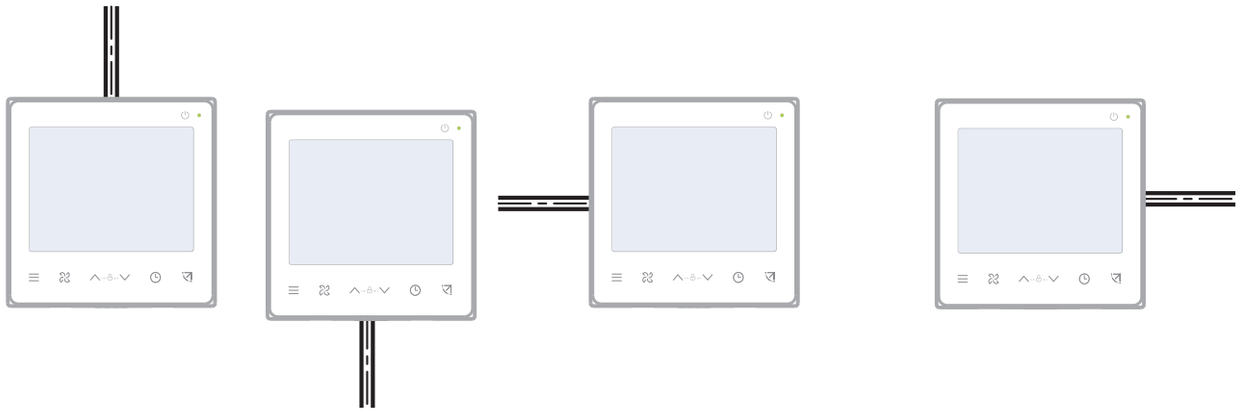

Up， down， left and right side wire outlet

4.2.3 Lead the 2-core shielded cable through the wiring hole in the bottom cap of the wired controller, and use screws to reliably fasten the shielded cable onto terminals X1 and X2. Then fix the bottom cap of the wired controller onto the electrical box by using pan head screws.

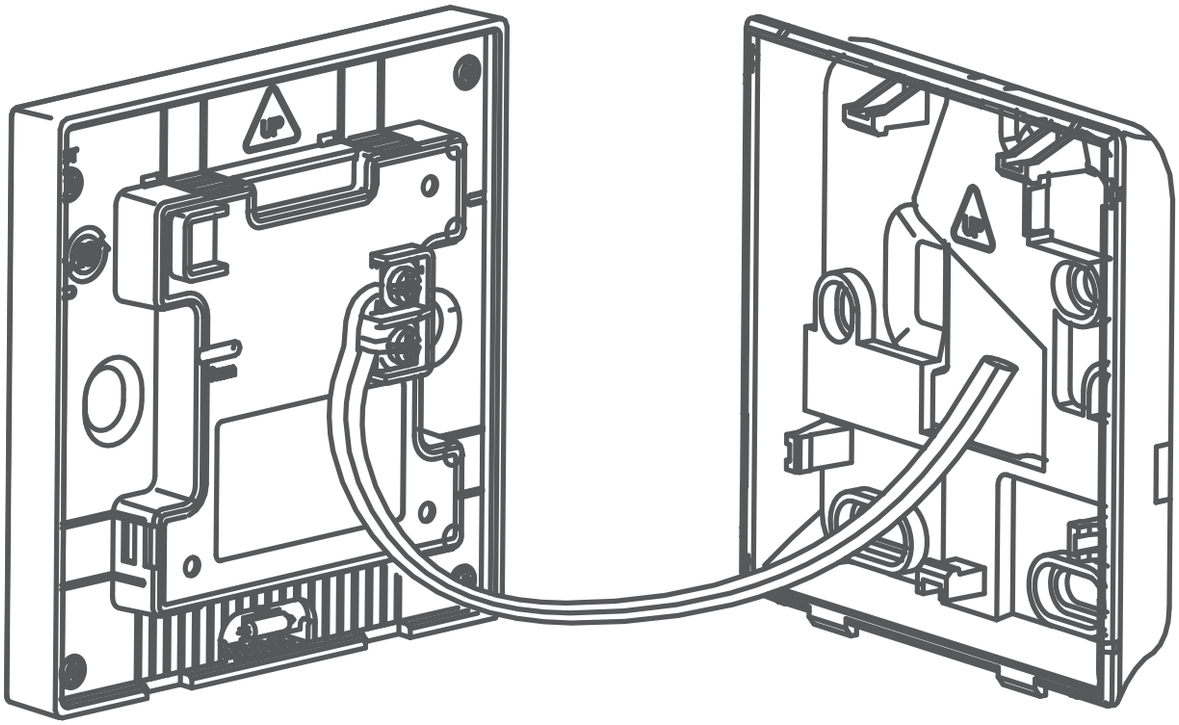

NOTE

Do not perform wiring operations on energized parts. Make sure that you remove the wired controller before proceeding. Otherwise, the wired controller may be damaged.

Do not overtighten the pan head screws; otherwise, the bottom cap of the wired controller may deform and cannot be levelled on the wall surface, which makes it difficult to install or not securely installed.

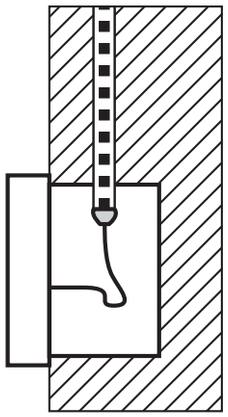

86Electrician box

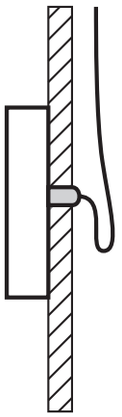

wire inside

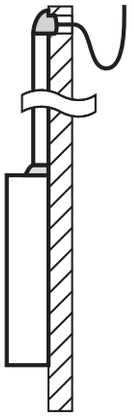

wire outlet

Avoid the water enter into the wired remote controller, use trap and putty to seal the connectors of wires during wiring installation.

4.2.4 Buckle the wired controller and the rear cover as shown in the following figure.

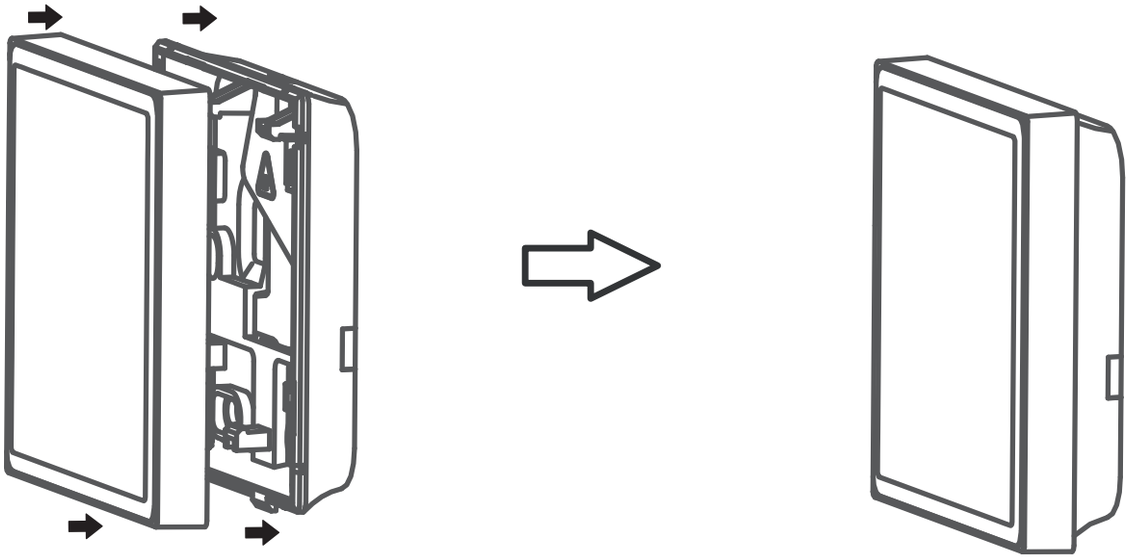

When they are correctly buckled

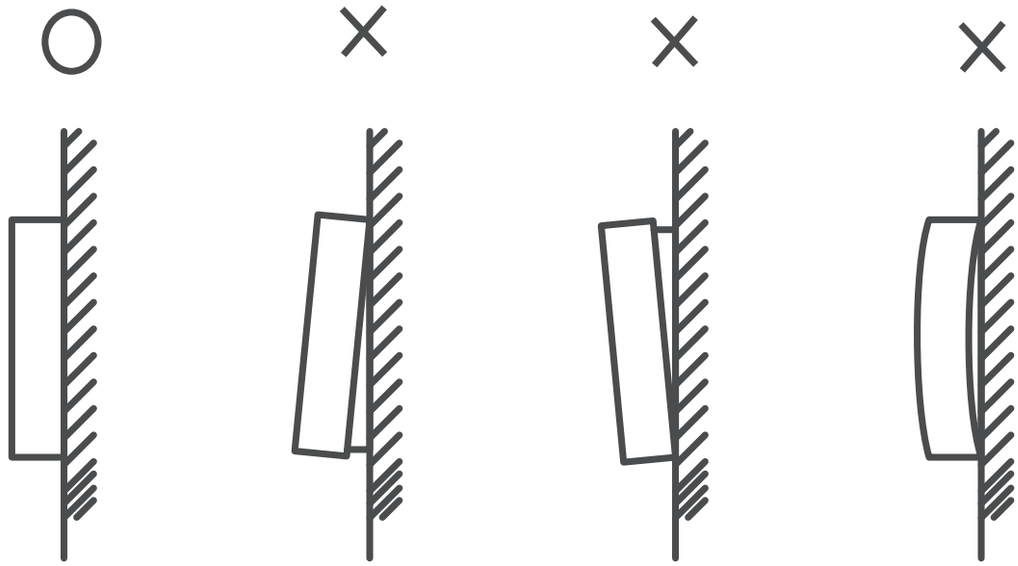

NOTE

Make sure that no cables are clamped when buckling the wired controller and bottom cap.

The wired controller and bottom cap should be installed correctly. Otherwise, they may get loose and fall apart.

5 OPERATION INSTRUCTIONS

5.1 Control Panel Explanation

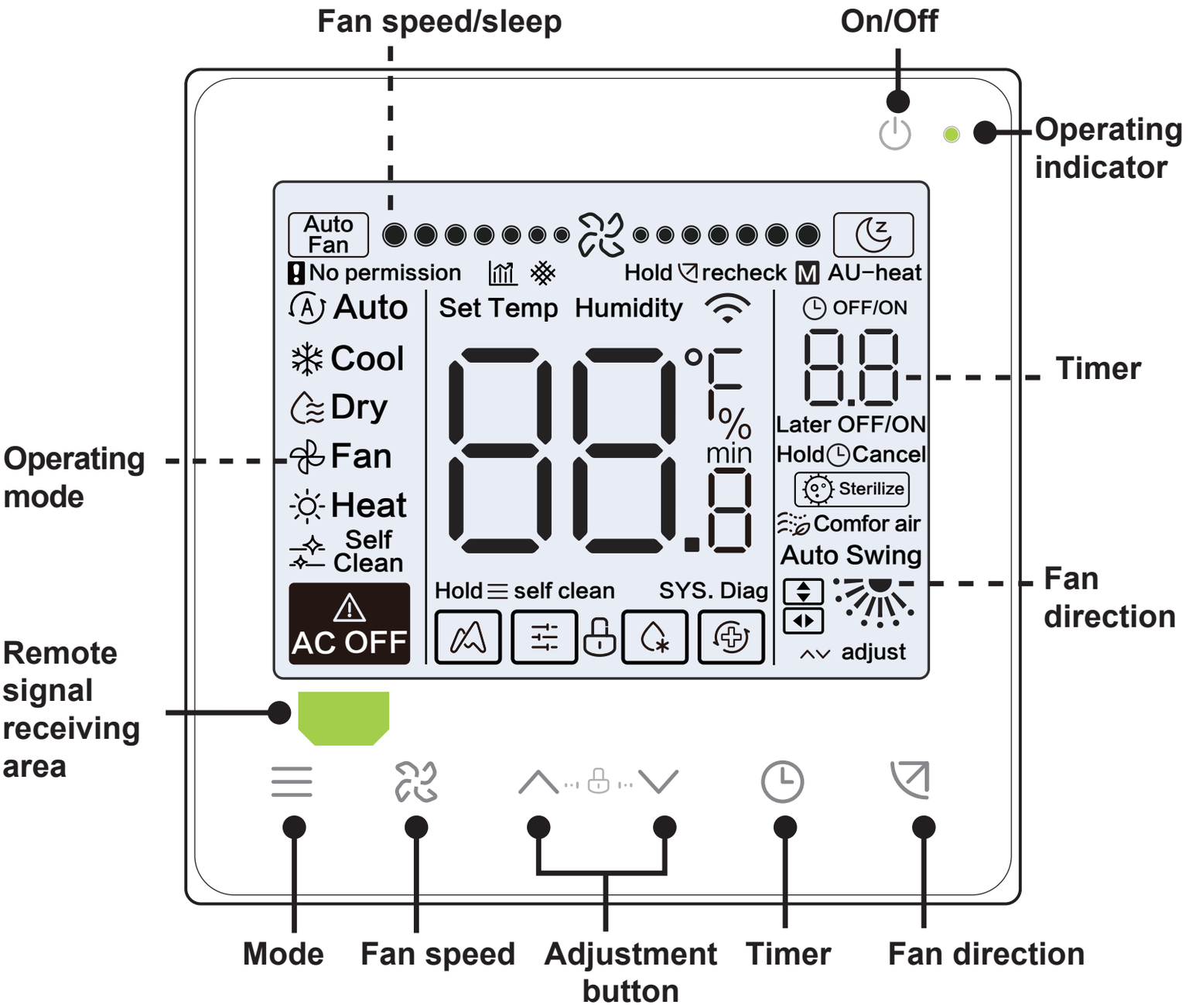

5.2 Display Explanation

NO.	Icon	Name	Description
1		Energy Efficiency Attenuation	It will be flashed when IDU energy efficiency attenuated.When "Parameter settings C17" is seted "yes",the screen displays IDU Energy Efficiency Attenuation percentage when the wired controller is in off mode,.Efficiency Attenuation percentage and filter blockage percentage will be displayed alternately in off mode when "Parameter settings C17 and C18" are seted “yes”.
2		Sleep Mode	It will be lighten when the unit is in sleep mode
3		ETA Function	It will be lightened when the ETA Function is activated.
4		Key Lock	Refer to page 24
5		Defrosting Mode	Refer to page 24
6		Lock Mode	It will be lightened when the mode of controller is locked.
7		Backup Mode	It will be flashed when IDU in backup state.
8		Filter Blockage	Refer to page 25
9	M	Main/secondary	It will be lightened when the controller is set as the main controller

5.3 Operation Instructions

On/Off

Press " ⏻ " to turn on or off the IDU.

INFORMATION

The screen and operating indicator get dimmed when the unit is powered off.

AC OFF The icon is displayed when the IDU is off.

Mode Selection

Each time " ≡ " is pressed, the operating mode changes according to the order shown below (Auto mode is specific to some models):

→ Auto → Cool → Dry → Fan → Heat

Set temperature

Except for fan mode, press " ∧ " or " ∨ " to adjust the indoor set temperature. Holding the button can rapidly increase or decrease the temperature value.

5.3.1 Auto mode temperature setting

In Auto mode, press " ∧ " and " ∨ ". The "Cool" and "Heat" icons blink. Press " ↗ " to select the set temperature for cooling or heating. The digital display in the temperature display area blinks. Press " ∧ " and " ∨ " to adjust the temperature, and press " ↗ " to confirm the temperature, or the temperature is automatically confirmed 3 seconds later, and this screen is exited.

In Auto mode, the wired controller displays Auto/Cool or Auto/Heat. When the IDU is operating for cooling in Auto mode, the "Auto" and "Cool" icons light up; when the IDU is operating for heating in Auto mode, the "Auto" and "Heat" icons light up.

5.3.2 Self clean function

self clean function.

Press and hold " ≡ " for 2s to start self clean function.

The self-cleaning process takes approximately 50 minutes and falls into four steps:

Preprocessing ➡ Freezing ➡ Melting and cleaning ➡ Drying

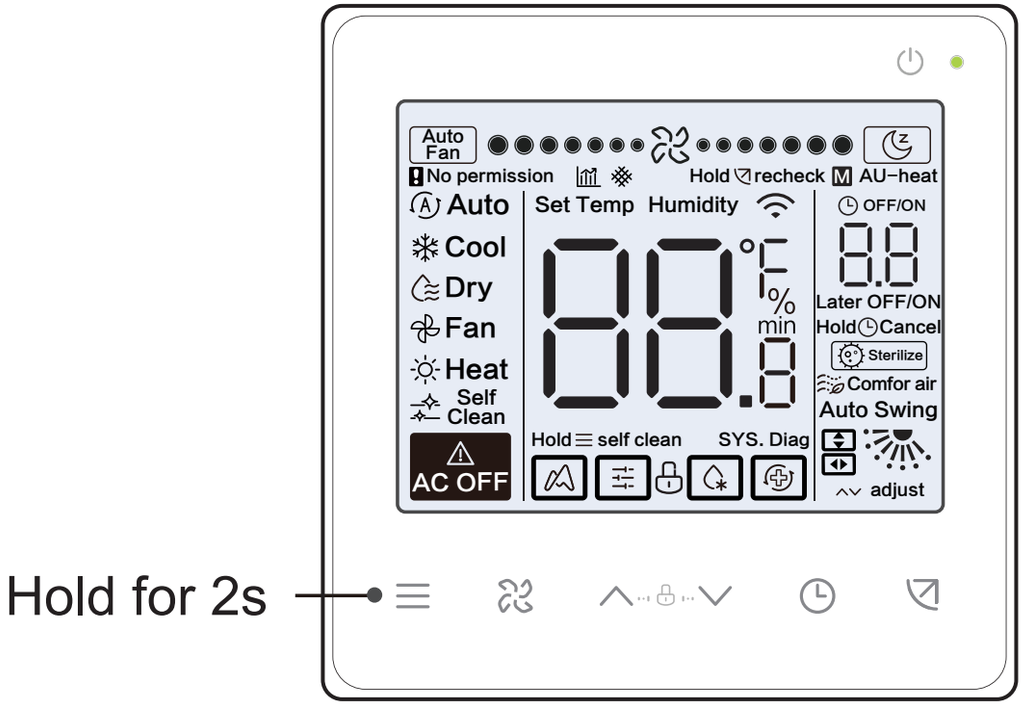

After self clean function is completed, the IDU powers itself off.

INFORMATION

To exit self clean function during operation, press " ⏻ ".

Some models do not have self clean function. For details, please refer to the manual of IDU.

When self clean function is enabled, all indoor units (sharing the same outdoor unit) start the process of self clean function.

During the process of self clean function, the IDU may blow out cool air or hot air.

5.3.3 Fan speed and fan direction setting

Adjust fan speed

Press " " to adjust fan speed, ranging from Auto, 7 speeds and sleep mode.

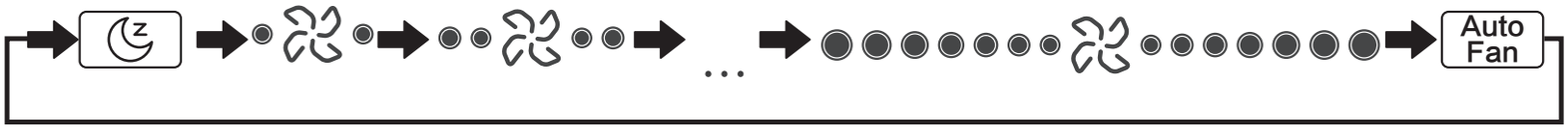

INFORMATION

After sleep mode has been running for 8 hours, the

" " icon is dimmed and the unit will exit the mode automatically.

Press the fan speed button to exit sleep mode.

In Auto mode and Dry mode, fan speed is automatic by default, and the fan speed is unadjustable.

Depending on IDU models, 3-speed or 7-speed can be set.

While ensuring efficiency, the IDU may adjust fan speeds depending on the indoor temperature. Therefore, it is normal if the real-time fan speed differs from the set fan speed or the fan stops.

After the fan speed is set, it takes time for the IDU to respond. It is normal if the IDU does not respond to the setting immediately.

Set swing

By pressing " " each, the fan direction is switched in the following sequence:

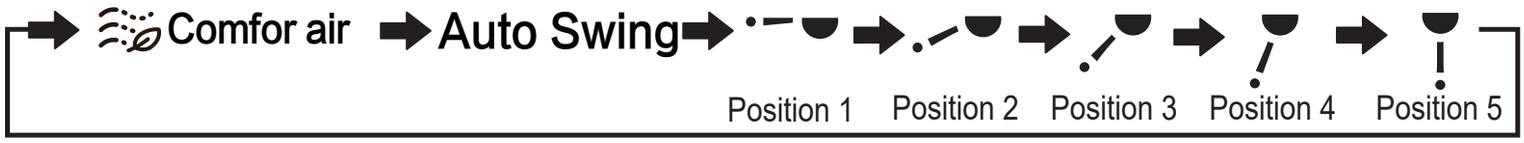

INFORMATION

It applies to IDUs containing electric air outlet panels.

When the unit is closed, the wired controller automatically shuts louvers of the air outlet panels.

For units that feature up/down and left/right swing, follow the steps below to change swing angle.

By pressing " ", " " lights up, and the angle of swing up and down 2 Hz flashes. Press " "and " " to change the angle, and code is sent after 0.5s. By pressing " ", " " lights up, and the angle of swing left and right 2 Hz flashes. Press " " and " " to change the angle, and code is sent after 0.5s. Then press " " to exit swing angle setting. The interface displays the set up and down angle. At this time " " is lighted and " " is dimmed.

up/down swing:

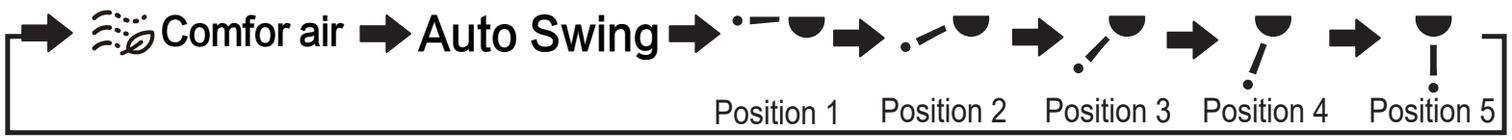

left/right swing:

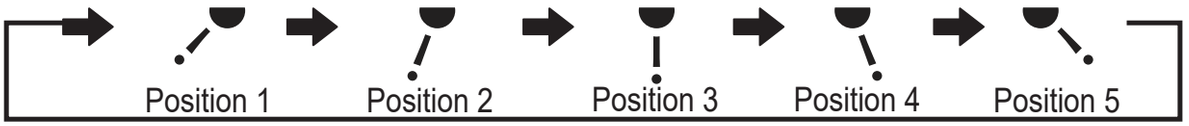

5.3.4 Timer setting

Timer On setting:

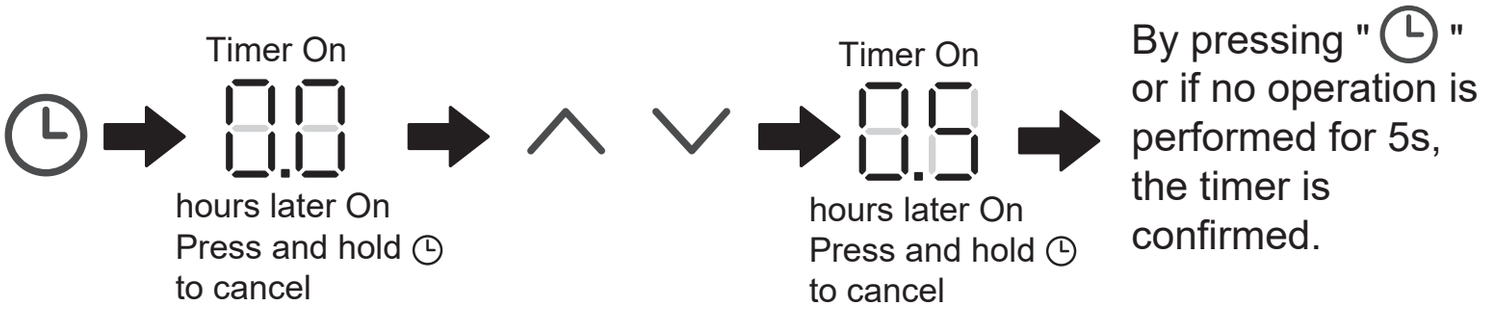

Timer Off setting:

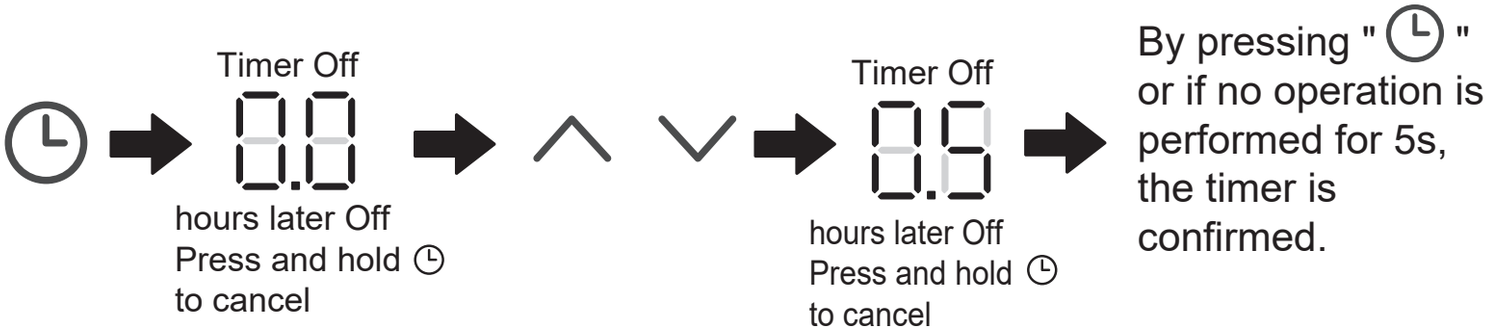

Cancelling timer function:

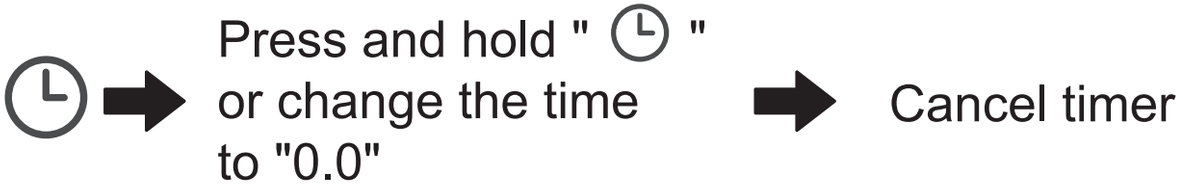

INFORMATION

Timer Off can be set when the IDU is on and Timer On can be set when the IDU is off.

5.3.5 Auxiliary heater on/off

This function works in heating mode.

Auto auxiliary heater on:

In heating mode, the auxiliary heater will be enabled automatically depending on the ambient temperature and at this time the IDU operates in Auto Auxiliary Heater On mode.

Auxiliary heater on:

Auxiliary heater off:

INFORMATION

The auxiliary heater is an additional heating component to the IDU unit, but it increases power consumption after it starts working.

5.3.6 Key lock setting

Enable key lock:

Holding both for 1 second

Enable key lock

The wired controller doesn't respond when buttons are pressed and " 🔒 " flashes.

Disable key lock:

Holding both for 1 second

Disable key lock

5.3.6 Defrosting Reminder

When frost builds up on the surface of the outdoor unit, the heating effect will be compromised. In this case, the unit starts defrosting automatically.

5.3.7 Clean Filer Reminder

When the operating time reaches the preset time, the Filter icon “ ” flash to remind users to clean the filter.

- Press and hold “ ”button for 3 seconds to remove the Filter icon “ ”
- Go to "Parameter settings C03" to turn on/off this function or preset time of this function.
- The secondary wired controller has no clean filer reminder function.

IDU filter blockage display

After open the IDU filter blockage display function from "Parameter settings C18", when the wired controller is in off mode, the screen displays IDU filter blockage percentage.

NOTE

If constant air flow is selected for IDU, the filter resistance will be set via the wired controller. The smaller you set this value, the more frequently you need to clean your filter. But this is more energy efficient and healthier. If you set this value too large, you can have the unit work for longer time without performing any maintenance. But it will consume more power and become dusty.

5.3.8 Sterilize mode

It only works with an IDU containing a sterilization module.

Enabling sterilization mode:

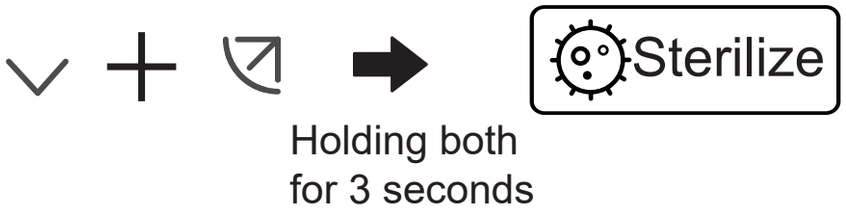

Disabling sterilization mode:

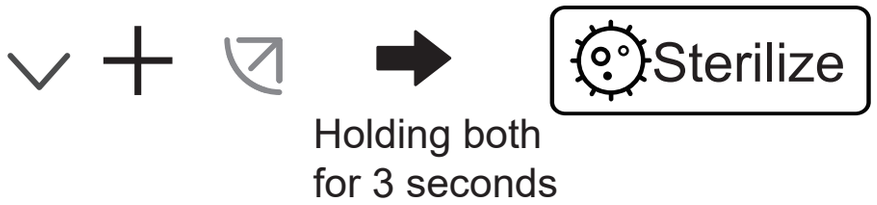

INFORMATION

On the Project Commissioning page, you can enable or disable sterilization feature.

Parameter N42 on the engineering setting page allows you to set the sterilization module.

It works only with the IDU provided with sterilization feature.

The sterilization module stops when the swing function is enabled, and does not resume operation until the swing function is disabled.

5.3.9 Humidity setting

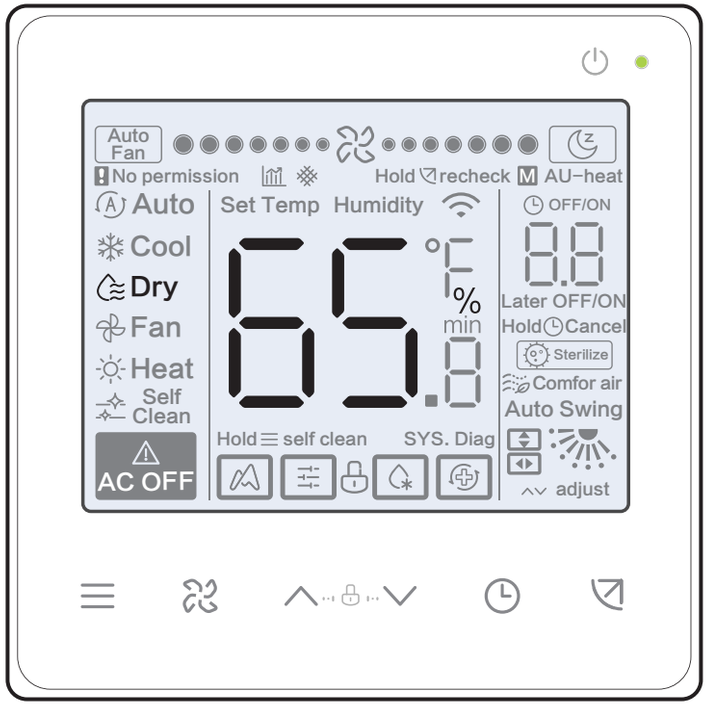

In dry mode, press " ∧ " and " ∨ " to change humidity in the range of 35-75%.

INFORMATION

This function only works when used with a humidity sensor.

The humidity is 65% by default when the wired controller is powered on for the first time.

Each time you press " ∧ " and " ∨ ", the value changes by 1%. Hold the button to speed up your operation.

5.3.10 Indoor temperature display

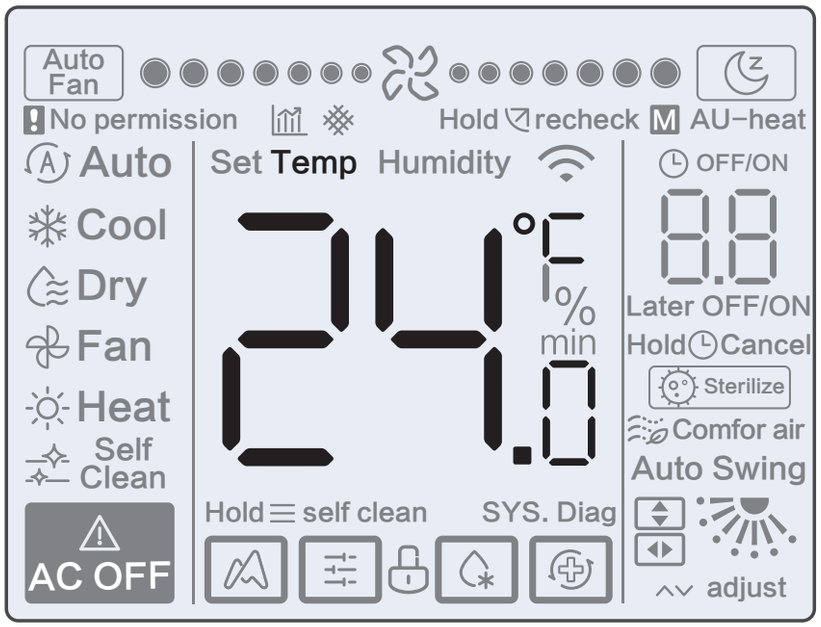

- This function can be set via the wired controller by setting the parameter C05 "whether indoor ambient temperature is displayed".
- Press any button on the screen to return to the previous page.

5.3.11 Functions of the main/secondary wired controller

- When two wired controllers control one indoor unit at the same time (2-to-1 system), one controller will be the Main, and the other will be the Secondary.
- The main wired controller rather than the secondary wired controller allows you to set the timer and IDU parameters.

5.4 Mode Conflict Reminder

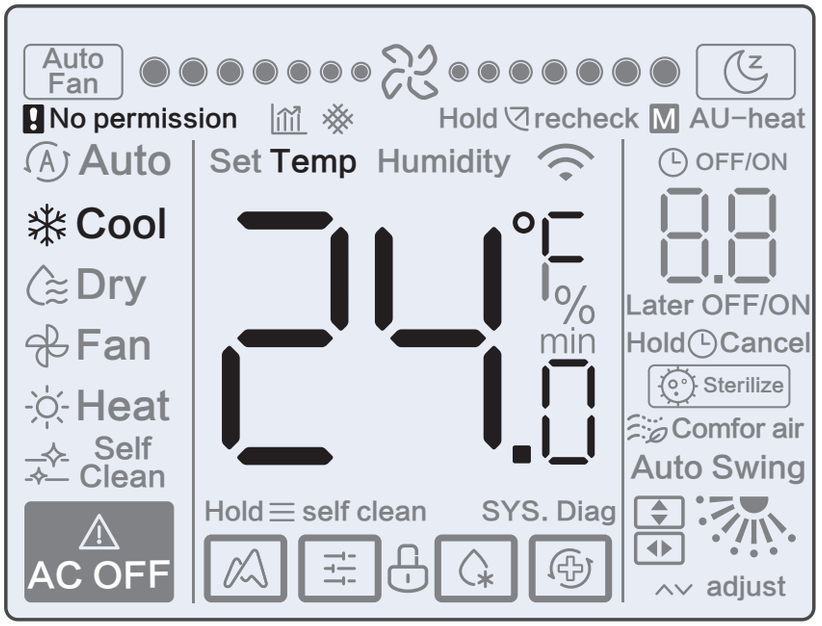

When the indoor unit detects a mode conflict, the icon "No permission " flashes with the current mode display.

5.5 Project Commissioning

5.5.1 Restore factory settings

- Holding " ", " " and " " at the same time for 5 seconds can restart and reset the Parameter settings of wired controller.

5.5.2 Automatically identifying models

- The wired controller can automatically identify the model of the IDU, based on which, the wired controller automatically updates the information, such as the spot check condition and error code of the IDU.

5.5.3 IDU address query

- If the indoor unit has no address, the wired controller will display U38 error.
- Press and hold " ∧ " and " ◷ " at the same time for 5s to enter IDU address query interface. Press " ◷ " to exit the interface.
- Once you are on the address query page, the wired controller displays the current address if the indoor unit has an address.
- Addresses can be set to allow control of one IDU by one controller or two controllers (can be set with the main wired controller, not any secondary wired controller). Press and hold " ◷ " and " ∧ " for 5s to enter IDU address query and setting interface. Then press " ◹ " and the number area begins flashing. Press " ∧ " and " ∨" to change address and press " ◹ " to confirm your changes. The wired controller will automatically exit the address setting page if no operation is performed for 60s, or you can press " ◷" to exit the address setting page.

INFORMATION

In the address query and setting state, the wired controller does not respond to or forward any remote control signal.

5.5.4 Parameter settings of the wired controller

- Parameters can be set in the power-on or power-off state.
- Hold " ⊿ " and " ≡ " for 3 seconds to enter the parameter setting interface.
- After entering the parameter setting interface, the ODU displays u00, the IDU displays n00-n63, and the wired controller displays CC. Press " ∧ " and " ∨ " to switch the parameter code. Set parameters according to the Table of Parameter Settings. Press "Swing" to enter the parameter setting interface. Then press " ∧ " and " ∨ " to change parameter value and press " ⊿ " to save changes.
- Press the " ◷ " button to return to the previous page until exiting the parameter setting or exiting the parameter setting after 60s without any operation.
- When it is in the parameter settings page, the wired controller does not respond to any remote control signal.

- When it is in the parameter settings page, the mode, fan speed, and switch buttons are invalid.
- Parameter C14 allows you to return to the home screen after pressing " ".

Parameter Code	Parameter Name	Parameter Range	Default Value	Remarks
C00	Main and secondary wired controller setting	0 indicates the main wired controller and 1 indicates a secondary wired controller	0	If two wired controllers control one IDU, addresses for two wired controllers must be different. You are not allowed to set IDU parameters via the secondary wired controller (address 1), but can set the wired controller.
C01	Cooling only/cooling and heating setting	00: Cooling and Heating 01: Cooling Only	00	Heating mode is not available in cooling only setting
C02	Power failure memory function setting for the wired controller	00: None 01: Available	00	For a two-way wired controller, this parameter is used to store the status of Follow Me.
C03	Time to remind users to clean the filter on the wired controller	00/01/02/03/04	01	00: No reminder to clean filter 01: 500h, 02: 1000h 03: 2500h 04: 5000h
C04	Settings for infrared receiver of wired controller	00: Disable 01: Enable	01	When "Disable the infrared receiver of the wired controller" is on, the wired controller cannot receive remote control signal.
C05	Whether indoor ambient temperature is displayed	00: No 01: Yes	00	
C06	LED indicator of wired controller	00: Off 01: On	01	When it is on, LED indicator shows the on/off state of the indoor unit. When it is off, LED indicator is off.

Parameter Code	Parameter Name	Parameter Range	Default Value	Remarks
C07	Wired controller Follow Me temperature correction	-5.0 to 5.0°C	Celsius: -1.0	Note: Accuracy is 0.5°C.
C08	Lower limit of cooling temperature	16°C to 30°C	V8 IDU and 3rd generation IDU: 16°C FAPU: 13°C AHUKit: 10°C	
C09	Upper limit of cooling temperature	16°C to 30°C	30°C	
C10	Lower limit of heating temperature	V8: °C: 16°C -30°C((default16°C) V6: °C: 17°C -30°C((default17°C)	V8: 16°C V6: 17°C FAPU: 13°C AHUKit: 10°C	
C11	Upper limit of heating temperature	16°C to 30°C	30°C	
C12	Set to display 0.5°C	00/01	01	00: No 01: Yes
C13	Wired controller button light setting	00/01	01	00: Off 01: On
C14	Send configuration parameters stored in the wired controller to IDU by one click	00/01/02/03/04	01	The latest configuration parameters stored in the wired controller will be changed after power on for two hours or after configuration parameters of wired controller are changed. Note: 1: Applicable to one-to-one scenario 2: Only for 2nd generation IDU
C15	Buzzer of the wired controller rings	00/01	01	00: No 01: Yes
C16	Backlight time	00/01/02	00	00: 15s 01: 30s 02: 60s

Parameter Code	Parameter Name	Parameter Range	Default Value	Remarks
C17	Whether energy efficiency attenuation is displayed when power off	00/01	00	00: No 01: Yes
C18	Whether IDU filter blockage is displayed when power off	00/01	00	00: No 01: Yes
C19	T1 temperature selection	F0/F1/F2/F3/…#IDU	F1	F0: IDU T1 temperature sensor F1: Follow Me, #IDU (IDUs connected to the system, ranging from 0 to 63) (Note: The secondary wired controller does not respond to Follow Me) F2: Second temperature sensor (reserved) F3: Ground sensor (reserved)
C20	Swing direction setting	00/01	00	00：Forward（Default） 01：Reverse

5.5.5 IDU parameter setting (2nd generation IDU)

Parameter Code	Parameter Name	Parameter Range	Default Value	Remarks
N00	Static pressure setting of IDU	IDU static pressure level: 00/01/02/03/04/05/06/07/08/09/~/19/FF	02	The IDU sets the selected corresponding static pressure (VRF unit: main board DIP of IDU; other models: reserved)
N01	Power failure memory function setting for the IDU	00/01	01	00: None 01: Available
N02	IDU up/down swing setting	00/01	01	00: None 01: Available
N03	IDU left/right swing setting	00/01	01	00: None 01: Available
N04	Whether the display board of IDU receives remote control signals	00/01	00	00: Yes 01: No
N05	Buzzer of the IDU rings	00/01	01	00: No 01: Yes
N06	Light (display panel) setting	00/01	01	00: Off 01: On
N07	Temperature unit	00/01	00	00: Celsius 01: Fahrenheit
N08	Mode changeover time interval in the auto mode (min)	00/01/02/03	00	00: 15min 01: 30min 02: 60min 03: 90min
N10	Whether the IDU has auxiliary heater	00/01	01	00: None 01: Available
N11	Set outdoor temperature value when auxiliary heater is on	-5 to 20°C	15°C	Note: Accuracy is 1°C.

Parameter Code	Parameter Name	Parameter Range	Default Value	Remarks
N16	Auxiliary heater on/off	00/01/02	00	00: Auto 01: Forced on 02: Forced off
N17	IDU cold draft prevention temperature settings	00/01/02/03/FF	00	Common IDU: 00: 15°C, 01: 20°C, 02: 24°C, 03: 26°C, FF: main board DIP of IDU FAPU: 00: 14°C, 01: 12°C, 02: 16°C, 03: 18°C, FF: reserved
N20	Fan speed setting in heating standby mode	0/1/14	0	0: Termal 1: Speed 1 14: Fan speed before going to standby mode
N21	Time to stop the fan of IDU (Termal)	00/01/02/03/04/FF	01	00: Fan on 01: 4min 02: 8 min 03: 12 min 04: 16 min FF: main board DIP of IDU
N22	EXV opening selection during heating standby	00/01/02	01	00: 56P 01: 72P 02: 0P FF: main board DIP of IDU
N23	Cooling return difference temperature	00/01/02/03/04	00	00: 1°C 01: 2°C 02: 0.5°C 03: 1.5°C 04: 2.5°C

Parameter Code	Parameter Name	Parameter Range	Default Value	Remarks
N25	IDU heating temperature compensation	00/01/02/03/04	00	VRF unit: 00: 6°C, 01: 2°C, 02: 4°C, 03: 6°C, 04: 0°C, FF: main board DIP of IDU Split unit: 00: 6°C, 01: 2°C, 02: 4°C, 03: 8°C, 04: 0°C, FF: reserved Mini VRF unit: 00: 6°C, 01: 2°C, 02: 4°C, 03: 8°C, 04: 0°C, FF: reserved Note: The wired controller sends only speed level other than values to IDU
N26	IDU cooling temperature compensation	00/01/02/03/04/FF	00	VRF unit: 00/01/FF, 00: 0°C, 01: 2°C, FF: main board DIP of IDU Split unit: 00/01/02/03/FF, 00: °C, 01: 1°C, 02: 2°C, 03: 3°C, FF: reserved Mini VRF unit: 00/01/02/03/04/FF, 00: °C, 01: 1°C, 02: 2°C, 03: 3°C, 04: -1°C, FF: reserved Note: The wired controller sends only speed level other than values to IDU
N28	Upper limit of automatic fan speed in cooling mode	4/5/6/7	5	4: Speed 4 5: Speed 5 6: Speed 6 7: Speed 7
N29	Upper limit of automatic fan speed in heating mode	4/5/6/7	6	4: Speed 4 5: Speed 5 6: Speed 6 7: Speed 7
N30	Constant air flow selection	00/01	01	00: Constant speed 01: Constant air flow
N42	Sterilization function setting	00/01	00	00: No sterilization function (default) 01: Plasma disinfection
N43	Sterilization setting	01/02	02	01: on 02: off

Parameter Code	Parameter Name	Parameter Range	Default Value	Remarks
N44	Silent mode setting	00/01	00	00: Off 01: On
N45	ECO	00/01	01	00: Off 01: On
N46	Drying time at self-cleaning	0/1/2/3	0	0: 10 min 1: 20 min 2: 30 min 3: 40 min
N57	On-site fanspeed adjustment factor	00/01	00	00: 1 01: 1.1
N58	Initial static pressure detection	00/01	00	00: Not reset 01: Reset
N61	Fresh air dry contact 1	00/01	00	2nd generation Function 00: Disconnect; 01: Start
N62	Fresh air dry contact 2	00/01	00	2nd generation Function 00: Disconnect; 01: Start
N63	Fresh air dry contact 3	00/01	00	2nd generation Function 00: Disconnect; 01: Start

5.5.6 IDU parameter setting (V8 IDU and 3rd generation IDU)

Parameter Code	Parameter Name	Parameter Range	Default Value	Remarks
N00	Static pressure of IDU	IDU static pressure level: 00/01/02/03/ 04/05/06/07/08/09/~/19	02	The IDU sets the selected corresponding static pressure (VRF unit: main board DIP of IDU; other models: reserved)
N01	Power failure memory function setting for the IDU	00/01	01	00: None 01: Available

Parameter Code	Parameter Name	Parameter Range	Default Value	Remarks
N02	IDU up/down swing setting	00/01/02/03/04	01	00: None 01: Available 02/03: Reserved 04: Q4/Qmin four air vents Note: The IDU can automatically identify up/down swing, so this function is invalid
N03	IDU left/right swing setting	00/01	01	00: None 01: Available Note: The IDU can automatically identify up/down swing, so this function is invalid
N04	Whether the display board of IDU receives remote control signals	00/01	00	00: Yes 01: No
N05	Buzzer of the IDU rings	00/01/02	02	00: No 01: Yes 02: remote controller only
N06	Light (display panel) setting	00/01	01	00: Off 01: On
N07	Temperature unit	00/01	00	00: Celsius 01: Fahrenheit
N08	Mode changeover time interval in the auto mode (min)	00/01/02/03	00	00: 15min 01: 30min 02: 60min 03: 90min
N11	Set outdoor temperature value when auxiliary heater is on	-25~20°C	0°C	Note: The values are accurate to 1°C or 1°F. °F: (-13)~68°F
N12	Indoor temperature when auxiliary heater is on	10°C to 30°C	24°C	(Accuracy is 1°C)

Parameter Code	Parameter Name	Parameter Range	Default Value	Remarks
N13	T1 temperature difference when auxiliary heater is on	0-7	4	0-7 indicates 0 - 7°C (Accuracy is 1°C)
N14	T1 temperature difference when auxiliary heater is off	0-10	6	0-10 indicates -4 - 6°C (Accuracy is 1°C)
N15	Auxiliary heater used alone	00/01	00	00: No 01: Yes
N16	Auxiliary heater on/off	00/01/02	00	00: Auto 01: Forced on 02: Forced off
N17	IDU cold draft prevention temperature settings	00/01/02/03/04	00	Common IDU: 00: 15, 01: 20, 02: 24, 03: 26, 04: anti-cold wind invalid FAPU: 00: 14, 01: 12, 02: 16, 03: 18, 04: anti-cold wind invalid Fan coil unit: 00: 32°C, 01: 34°C, 02: 36°C, 03: 38°C, 04: anti-cold wind invalid, water inlet temperature.
N18	Fan speed setting in cooling standby mode	00/01/02/03/04/05/06/07/14	01	00: Start/Stop delay 01: Speed 1 02: Speed 2 03: Speed 3 04: Speed 4 05: Speed 5 06: Speed 6 07: Speed 7 14: Fan speed before going to standby mode
N19	Standby fan speed L1 range in dry mode	00/01/02/03	01	00: Fan off 01: L1 02: L2 03: Speed 1

Parameter Code	Parameter Name	Parameter Range	Default Value	Remarks
N20	Fan speed setting in heating standby mode	0/1/14	0	0: Termal 1: Speed 1 14: Fixed at Speed 1
N21	Time to stop the fan of IDU (Termal)	00/01/02/03/04	01	00: Fan shutdown 01: 4min 02: 8min 03: 12min 04: 16min
N22	EXV opening selection during heating standby	00/01/02/14	14	00: 224P 01: 288P 02: 0P 14: Auto regulation
N23	Cooling return difference temperature	00/01/02/03/04	00	00: 1°C 01: 2°C 02: 0.5°C 03: 1.5°C 04: 2.5°C
N24	Heating return difference temperature	00/01/02/03/04	00	00: 1°C 01: 2°C 02: 0.5°C 03: 1.5°C 04: 2.5°C
N25	IDU heating temperature compensation	00/01/02/03/04	00	00: 6°C 01: 2°C 02: 4°C 03: 8°C 04: 0°C

Parameter Code	Parameter Name	Parameter Range	Default Value	Remarks
N26	IDU cooling temperature compensation	00/01/02/03/04	00	00: 0°C 01: 1°C 02: 2°C 03: 3°C 04: -1°C
N27	Maximum indoor temperature drop D3 in dry mode	00/01/02/03/04	01	00: 3°C 01: 4°C 02: 5°C 03: 6°C 04: 7°C
N28	Upper limit of automatic fan speed in cooling mode	4/5/6/7	5	4: Speed 4 5: Speed 5 6: Speed 6 7: Speed 7
N29	Upper limit of automatic fan speed in heating mode	4/5/6/7	5	4: Speed 4 5: Speed 5 6: Speed 6 7: Speed 7
N30	Constant air flow setting	00/01	01	00: Constant speed 01: Constant air flow
N31	High ceiling setting	00/01/02	00	Set IDU height, 00: 3m 01: 4m 02: 4.5m
N32	Q4/Q4min air outlet 1 setting	00/01	00	00 - Free control 01 - Off
N33	Q4/Q4min air outlet 2 setting	00/01	00	00 - Free control 01 - Off
N34	Q4/Q4min air outlet 3 setting	00/01	00	00 - Free control 01 - Off

Parameter Code	Parameter Name	Parameter Range	Default Value	Remarks
N35	Q4/Q4min air outlet 4 setting	00/01	00	00 - Free control 01 - Off
N36	Cooling only for IDU	00/01	00	00: Cooling and heating 01: Cooling only
N37	One-to-more of wired controller enabled	00/01	00	00: No 01: Yes
N38	Long-distance on/off function setting	00/01	00	00: Turn off the IDU when closed 01: Turn off the IDU when open Note: When turn off the IDU by long-distance on/off port, the wired controller forV8 IDU and 3rd generation IDU will display d6
N39	Delay time setting (Using long-distance on/off port to turn off the IDU)	00/01/…/06	00	00 - No delay 01 - 1min delay 02 - 2min 03 - 3min 04 - 4min 05 - 5min 06 - 10min
N40	Long-distance alarm function setting	00/01	00	00: Alarm when closed 01: Alarm when open
N41	Faster cooling mode setting	00/01	00	00: Off 01: On
N42	Sterilization function	00/01	00	00: No sterilization function (default) 01: Plasma disinfection
N43	Sterilization setting	00/01/02	00	00: Auto on 01: Forced on 02: Forced off
N44	Silent mode setting	00/01	00	00: Off 01: On
N45	ECO	00/01	00	00: Off 01: On

Parameter Code	Parameter Name	Parameter Range	Default Value	Remarks
N46	Drying time at self-cleaning	0/1/2/3	0	0: 10 min 1: 20 min 2: 30 min 3: 40 min
N47	Mildew-proof fan operation duration (power off in cooling/dry mode, except power off due to faults)	00/01/02/03	00	00 - Invalid (default) 01 - 60s 02 - 90s 03 - 120s
N48	Dirt proof for ceiling	00/01	00	00: Invalid 01: Valid
N49	Condensation proof	00/01	00	00: Invalid 01: Valid
N50	Human Detect Sensor	00/01/02	00	00: Invalid 01: Used to adjust the set temperature when unattended 02: Used to turn off the unit when unattended
N51	Setting temperature adjustment interval when unattended	00/01/02/03/04/05	00	00: 15 min 01: 30 min 02: 45 min 03: 60 min 04: 90 min 05: 120 min
N52	Setting maximum temperature adjustment when unattended	00/01/02/03	00	00: 1°C 01: 2°C 02: 3°C 03: 4°C

Parameter Code	Parameter Name	Parameter Range	Default Value	Remarks
N53	Stop delay when unattended	00/01/02/03/04/05	01	00: 15 min 01: 30 min 02: 45 min 03: 60 min 04: 90 min 05: 120 min
N54	ETA function setting	00/01	00	00: Off 01: On
N55	Energy rating of cooling ETA function	00/01/02	00	00: Level 1 01: Level 2 02: Level 3
N56	Energy rating of heating ETA function	00/01/02	00	00: Level 1 01: Level 2 02: Level 3
N57	On-site fanspeed adjustment factor	00/01/02/03/04/05/06	00	00: 1 01: 1.1 02: 1.05 03: 1.15 04: 0.95 05: 0.9 06: 0.85
N58	Initial static pressure detection	00/01	00	00: Not reset 01: Reset
N59	Filter ending - initial static pressure setting	00/01/…/19	00	00-10Pa/01-20Pa/02-30Pa ~19-200Pa
N60	Ambient temperature when preheating is turned on	00/01/02	02	00: 5°C 01: 0°C 02: (-5)°C
N61	Fresh air dry contact 1	00/01	00	2nd generation Function 00: Disconnect; 01: Start

Parameter Code	Parameter Name	Parameter Range	Default Value	Remarks
N62	Fresh air dry contact 2	00/01	00	2nd generation Function 00: Disconnect; 01: Start
N63	Fresh air dry contact 3	00/01	00	2nd generation Function 00: Disconnect; 01: Start
N64	Electric heater option in heating mode with valves open/closed	00/01	00	0: Heating mode with valves open 01: Heating mode with valves closed, only applicable to FCUs
N65	Setpoint of anti hot air temperature for IDU in cooling mode [anti hot air temperature of FCU of the old platform]	00/01/02/03/04	00	FCU: 00: 0°C 01: -2°C 02: -4°C 03: -6°C 04: Invalid hot air prevention, inlet water temperature - indoor ambient temperature
N66	Auto Dry Function	00/01	00	00: Invalid (default) 01: Valid Note: Only applicable to operations in Cool or Auto mode
N67	Auto Dry Target relative humidity	40%/41%/42%/……/70%	65%	
N68	Refrigerant leakage fault reset	00/01	00	00: Not reset; 01: reset

5.5.7 Parameter Settings for ODU

Parameter Code	Parameter Name	Parameter Range	Default Value	Remarks
U0	Energy rating of ODU	40-100%, every 1%	100%	
U1	Silence level of ODU	00/01/…/14	00	Level 0-14
U2	VIP indoor unit address	0~63	0xFF	When more than one unit is controlled by one wired controller, the controller can only set the IDU physically connected to it to be the VIP IDU.
U3	Heating and air supply enabled at the same time	00/01	00	00: Off 01: On

INFORMATION

The parameter settings of the main and secondary wired controllers are mutually independent, and do not affect each other. Parameters of IDU and ODU cannot be set via the secondary wired controller.

5.5.8 Query Operations of Wired Controller

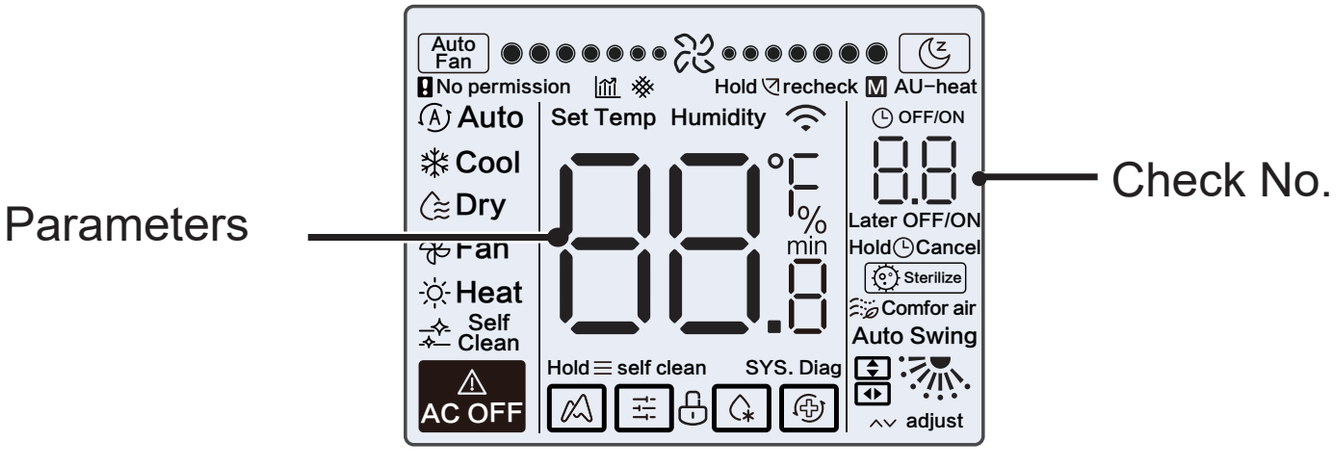

- On the home screen, press and hold " ≡ " and " ∧ " at the same time for two seconds to enter the query interface, and u00-u03 indicates ODUs, n00-n63 indicates IDUs, and CC indicates the wired controller. Press " ∧ " and " ∨ " to switch the parameter code. Press "Swing" to enter the parameter query page.
- Press " ◷ " to exit the query page. The parameter query page automatically closes if no button is pressed within the next 60 seconds
- Press " ∧ " or " ∨ " to query the parameters, and the parameters can be queried cyclically.
- On the top of the query page, the "Timing area" displays the check list serial number, and the "Temperature area" displays the check list parameters.
- Check list query information is listed as follows: Information may vary depending on unit model. Check list of parameters applies to VRF units and mini VRF units of V6 (including IDUs and ODUs), inverter split of V6 (including IDUs and ODUs), as well as IDUs and ODUs of V8 only.

Check list content:

1. Query of wired controller address

Parameter Code	Parameter Name	Remarks
1	Query of active IDU addresses for wired controller (one-to-more)	Each address is displayed for 1.5s. Addresses are alternatively displayed. To clear historical addresses, restore the wired controller to factory settings.
2	Historical record query of IDU addresses for wired controller (one-to-more)	
3	Wired controller program version No.	

2. 2nd generation IDU check list

1	2nd generation IDU check list	IDU address	IDU address	IDU address(00)
2		Capacity HP of IDU	Capacity HP of IDU	IDU capacity (kW)
3		Indoor unit network address	Indoor unit network address	IDU network address (00)
4		Actual set temperature Ts	Actual set temperature Ts	Current set temperature
5		Actual T1 indoor temperature	Actual T1 indoor temperature	Indoor ambient temperature T1
6		Actual T2 indoor temperature	Actual T2 indoor temperature	Indoor pipe temperature T2
7		Actual T2A indoor temperature	Actual T2A indoor temperature	--
8		Actual T2B indoor temperature	Actual T2B indoor temperature	--
9		Temperature of FAPU, Ta	Temperature of FAPU, Ta	--
10		Compressor discharge temperature	Compressor discharge temperature	Compressor discharge temperature
11		Target superheat	Target superheat	--
12		EXV opening (actual opening/8)	EXV opening (actual opening/8)	--
13		Software version No.	Software version No.	Software version No.
14		Error code	Error code	Error code

3. V8 IDU and 3rd generation IDU check list

No.	Displayed Content	No.	Displayed Content
1	IDU address	10	Actual set humidity RHs
2	Capacity HP of IDU	11	Actual RH indoor humidity
3	Actual set temperature Ts	12	Actual fresh air processing unit TA air supply temperature
4	Set temperature of the unit that is operating currently, Ts (Remarks: The temperature displayed is the actual set temperature Ts)	13	Air-blow pipe temperature
		14	Compressor discharge temperature
		15	Target superheat
5	Actual T1 indoor temperature	16	EXV opening (actual opening/8)
6	Modified indoor temperature T1_modify	17	Software version No.
7	T2 heat exchanger intermediate temperature	18	Historical error code (recent)
8	T2A heat exchanger liquid pipe temperature	19	Historical error code (sub-recent)
9	T2B heat exchanger gas pipe temperature	20	[———] is displayed

4. ODU check list

Display	V6 VRF unit	V6 mini VRF unit	Inverter split	V8 VRF unit	Description
1	ODU address	ODU address	ODU address (00) Unit capacity	ODU address	0 to 3
2	Unit capacity	Unit capacity	Number of ODUs	ODU capacity	Unit: HP
3	Number of ODUs	Number of ODUs		ODU Qty	1 to 4
4	--	--	--	IDU Qty settings	
5	ODU capacity demand	ODU capacity demand	ODU load target	ODU capacity demand	Only displayed on the master unit, while the slave unit displays 0.
6	Compressor 1 frequency	Compressor 1 frequency	Operating frequency	Actual frequency of compressor 1	Actual Frequency
7	Compressor 2 frequency	--	--	Actual frequency of compressor 2	Actual Frequency

Display	V6 VRF unit	V6 mini VRF unit	Inverter split	V8 VRF unit	Description
8	Operating mode	Operating mode	Operating mode	Operating mode	0: Off 2: Cool 3: Heat 5: Hybrid cooling 6: Hybrid heating
9	Mode priority	Priority mode	--	--	
10	Speed of DC fan A/A1	Operating fan speed	Operating speed of DC fan	Fan speed 1	Fan speed
11	Speed of DC fan B/B1			Fan speed 2	Fan speed
12	T2 average temperature (corrected)	T2 average temperature (corrected)	Indoor pipe temperature	T2 average	Actual temperature
13	T2B average temperature (corrected)	T2B average temperature (corrected)	Indoor pipe temperature	T2B average	Actual temperature
14	T3 condenser tube temperature	T3 tube temperature	Outdoor pipe temperature T3	T3	Actual temperature
15	T4 ambient temperature	T4 ambient temperature	Outdoor ambient temperature	T4	Actual temperature
16	--	--	--	T5	Actual temperature
17	T6A plate heat exchanger inlet temperature	--	--	T6A	Actual temperature
18	T6B plate heat exchanger outlet temperature	--	--	T6B	Actual temperature
19	Inverter compressor A discharge temperature	T5 discharge temperature	Discharge temperature	T7C1	Actual temperature
20	Inverter compressor B discharge temperature	--	--	T7C2	Actual temperature
21	--	--	--	T71	Actual temperature
22	--	--	--	T72	Actual temperature

Display	V6 VRF unit	V6 mini VRF unit	Inverter split	V8 VRF unit	Description
23	--	--	--	T8	Actual temperature
24	Tf1 inverter module A temperature	Tf module temperature	--	Ntc	Actual temperature
25	Tf2 inverter module B temperature (reserved)	--	--		
26	--	--	--	T9	Actual temperature
27	--	TL refrigerant cooling pipe temperature	--	TL	Actual temperature
28	System discharge superheat degree	--	--	Discharge superheat degree	Actual temperature
29	--	--	--	Primary current	
30	Inverter compressor A current	Actual current value	Current value	Compressor 1 current	Actual current
31	Inverter compressor B current	--	--	Compressor 2 current	
32	Opening of electronic expansion valve A	EXV Opening	Expansion valve opening	EXVA opening	V6 VRF unit: opening = displayed value × 4 V6 mini VRF unit: opening = displayed value × 8 Inverter split: opening = displayed value × 8 V8 VRF unit: opening = displayed value × 24
33	Opening of electronic expansion valve B	--	--	EXVB opening	
34	Opening of electronic expansion valve C	--	--	EXVC opening	Opening = Displayed value × 4
35	--	--	--	EXVD opening	
36	High pressure of system	--	--	High pressure	Pressure = Displayed value / 100
37	Low pressure of the system (reserved)	--	--	Low pressure	Pressure = Displayed value / 100
38	--	--	--	Online IDU Qty	/

Display	V6 VRF unit	V6 mini VRF unit	Inverter split	V8 VRF unit	Description
39	Number of indoor units running (in the case of virtual addresses, this is the number of units with the virtual addresses included)	Running IDU Qty		Running IDU Qty	Actual Qty
40	VIP indoor unit address	VIP indoor unit address		/	
41	-- -- -- -- -- --	-- -- -- -- -- --		Heat exchanger status	0: Heat exchanger off 1: C1 2: D1 3: D2 4: E1 5: F1 6: F2
42	-- -- -- -- -- -- --	-- -- -- -- -- -- --		System startup status	[0] No special mode [1] Oil return [2] Defrosting [3] Start [4] Stop [5] Quick inspection [6] Self-cleaning
43	--	--		Silent settings	0 to 15 correspond to the noise level

Display	V6 VRF unit	V6 mini VRF unit	Inverter split	V8 VRF unit	Description
44	--	--	--	Static pressure settings	0: 0Pa
	--	--	--		1: 20Pa
	--	--	--		2: 40Pa
	--	--	--		3: 60Pa
	--	--	--		4: 80Pa
	--	--	--		5: 100Pa
	--	--	--		6: 120Pa
45	--	--	--	TES	Actual temperature
46	--	--	--	TCS	Displayed value -25
47	--	--	--	DC voltage	Actual voltage = Displayed value × 10
48	--	--	--	AC voltage	Actual voltage = Displayed value × 2
49	--	--	--	ODU blockage	0 to 10
50	Program version No.	Program version No.	--	Software version	
51	Last malfunction	Last error or protection code	--	Last malfunction	

5.5.9 Error display

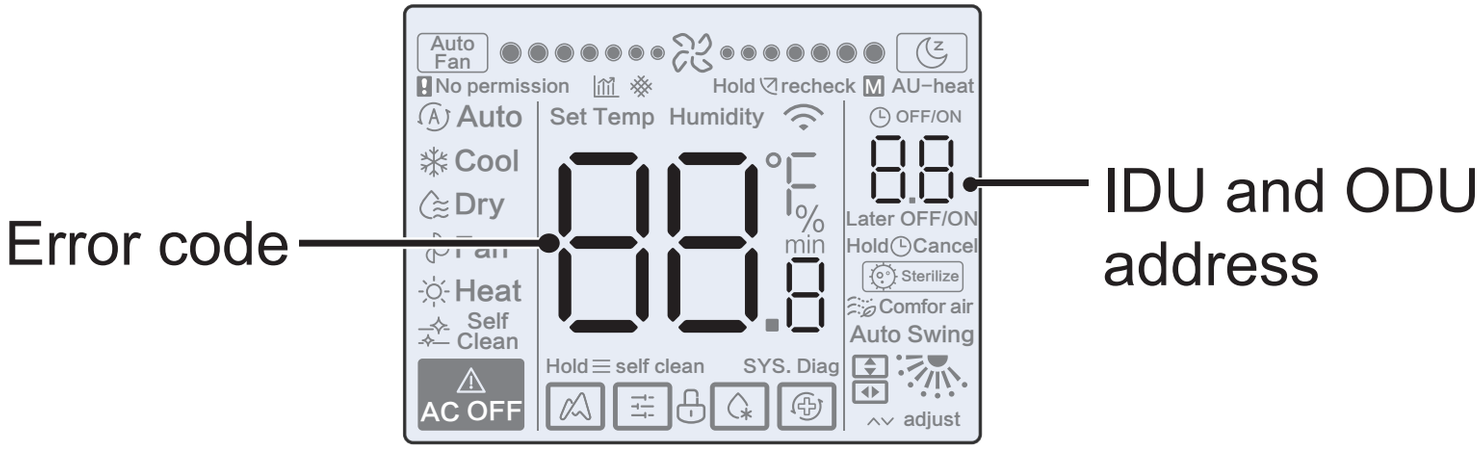

- When a communication fault occurs between the wired controller and any of the IDUs, the wired controller reports "C51". If an IDU has no address, the wired controller of V8 system displays "U38".
- In case an IDU fails, the address of the IDU is displayed in the timer area and the fault code displayed in the temperature area. In case an ODU fails, the address of the ODU is displayed in the timer area and the fault code displayed in the temperature area.
- Notify the distributor of the error code. Do not disassemble, modify or repair the IDU without authorization.

Code and Error Explanation about wire controller.

Code	Explanation
C51	Communication failure between indoor unit and wire controller
C76	Master slave wire control communication error
E31	Wire controller temperature sensor fault

- For Code and Error Explanation about IDU and ODU, please refer to the instruction manual of IDU and ODU.

16117100003474 V.D

印刷方式：黑白印刷，100*100mm
材质说明：封面封底铜版纸105g
内页 双胶纸80g
注意：客牌定制需注意将P16和P47的
Midea ETA Function改为
ETA Function

版本升级	更改人	更改日期	更改主要内容	涉及更改页面（印刷页码）
A升级到B	邹健伟	20230209	增加或修改描述	P36 P18 P35 P40~P43 P47~P49 P52 P55~P57
B升级到C	邹健伟	20230215	勘误封底编码	封底
C升级到D	邹健伟	20230303	取消Midea	P16